Software:

Design Check to AS 4678 of:

- **Segmental Concrete Reinforced Soils**
- **Segmental Concrete Gravity Retaining Walls**
- **Reinforced Concrete Masonry Cantilever Retaining Walls**

Design Check to AS 4678 of:

- **Segmental Concrete Reinforced Soils**
- **Segmental Concrete Gravity Retaining Walls**
- **Reinforced Concrete Masonry Cantilever Retaining Walls**

Contents

PART 1
User Manual - Design Check to AS 4678 of:

- **Segmental Concrete Reinforced Soils**
- **Segmental Concrete Gravity Retaining Walls**
- **Reinforced Concrete Masonry Cantilever Retaining Walls**

Scope
This manual applies to the use of the Microsoft Excel spreadsheet to analyse and check the designs, to Australian Standard AS 4678-2002, of:

- Segmental Concrete Reinforced Soils
- Segmental Concrete Gravity Retaining Walls
- Reinforced Concrete Masonry Cantilever Retaining Walls.

Limitation of Use
This software package is intended for use by suitably qualified and experienced civil engineers, conversant with the requirements of Australian Standards AS 4678 and the other documents, referenced in the manual. It use is subject to the professional judgement of the civil engineer, acting on the advice of a suitably qualified and experienced geotechnical engineer where appropriate.

The design engineer must assume responsibility for:

- Verifying the suitability of the particular application;
- Designing and ensuring the construction of an adequate functional drainage system;
- Ensuring the global stability of the retaining wall and surrounding soil; and
- Analysis of the global stability of the retaining wall and surrounding soil, which is beyond the scope of this spread sheet.

The spreadsheet may not be used for structures, which are:

- Outside the scope of AS 4678; or
- Over 8 m high; or
- Founded in soft ground or landslip areas, steep sided or inclined gullies; or
- Subject to cyclic loading or revetments; or
- Sill beams; or
- Bridges; or
- Subject to mining subsidence; or
- Subject to differential settlements.

In respect of designing for serviceability, the spread sheet can provide information on working loads and stresses in components and supporting soils, but the determination of movement, settlement and other deflection is beyond the scope of the spreadsheet. The determination of forward creep due to cyclic expansion and shrinkage of clay soils is also beyond the scope of this spreadsheet.

Disclaimer
The authors, publishers and distributors of this spreadsheet, and associated material, do not accept any responsibility for incorrect, inappropriate or incomplete use of this information. They do not accept any responsibility for errors that occur as a result of changes to the spreadsheet by others, or by inadequate site investigation, design and specification.

References
The analysis and design method set out in this spreadsheet are compatible with the following documents:

- AS 4678- 2002 *Earth retaining structures*, Standards Australia
- Reinforced Concrete Masonry Cantilever Retaining Walls – Design and Construction Guide Concrete Masonry Association of Australia, MA51
- Segmental Concrete Reinforced Soil Retaining Walls – Design and Construction Guide Concrete Masonry Association of Australia, MA52
- Segmental Concrete Gravity Retaining Walls – Design and Construction Guide Concrete Masonry Association of Australia, MA53.

Accessing the Reference Documents
The design engineer and construction engineer should ensure that they have current copies of the above-mentioned references, together with any other relevant information. It is suggested that they periodically check the following web sites.

- AS 4678- 2002 is available for purchase from SAI Global http://www.sai-global.com/
- MA51, MA52 and MA53 are available from the Concrete Masonry Association of Australia http://www.cmaa.com.au/html/CMAA_TechInfo.html.com

The designer must determine the suitability of these documents and the method in the spreadsheet for the particular application.

Behaviour of Segmental Gravity and Segmental Concrete Reinforced Soil Retaining Walls
If unsupported by a retaining wall, soil will slump to its angle of repose. Some soils, such as clays, have cohesion that enables vertical and near-vertical faces to remain partially intact, but even these may slump under the softening influence of ground water. When a retaining wall is constructed, it restricts this slumping. The soil exerts an active pressure on the structure, which deflects a little and is then restrained by the friction and adhesion between the base and soil beneath, passive soil pressures in front of the structure and the bearing capacity of the soil beneath the toe of the structure.

If ground water is trapped behind the retaining structure, it exerts hydraulic pressure. This ground water also reduces the adhesion and bearing resistance. A surface sealing layer and surface drainage system minimise the quantity of rainwater entering the soil mass. A sub-surface drainage system adjacent to the segmental concrete facing and (sometimes) beneath the wall reduce pore water pressures and thus reduce the tendency for local or global slip. If massive rock formations are present immediately behind the structure, these may restrict the volume of soil which can be mobilised and thus reduce the pressure.

Segmental Concrete Reinforced Soil Retaining Walls
Segmental Concrete Reinforced Soil Retaining Walls consist of a series of horizontal geogrids that have been positioned and pulled tight in a compacted soil mass, thus strengthening it and restricting its slump. The geogrids are strategically placed to intersect potential failure planes that are inclined from near the base of the wall, up at an angle (depending on the soil properties), to the top of the fill. The function of the geogrids is to “strengthen” the soil mass and they are “anchored” beyond the potential failure planes. Local collapse and erosion of the front face is eliminated by fixing concrete segmental facing units to the exposed ends of the geogrids. However, the segmental concrete facing is not designed to “retain” the strengthened soil mass, which should be able to stand independently of the facing except for local effects. The connection spacing (and the geogrid spacing) must account for the local stability of the facing, including bulging and rotation above the top geogrid. The top course is normally bonded to the course below using epoxy cement.

Segmental Concrete Gravity Retaining Walls
Segmental Concrete Gravity Retaining Walls rely on the mass of the facing to resist overturning, sliding and concentrated bearing pressures. The top course is normally bonded to the course below using epoxy cement.

Reinforced Concrete Masonry Cantilever Retaining Walls
Reinforced Concrete Masonry Cantilever Retaining Walls rely on the mass of the whole structure to resist overturning, sliding and concentrated bearing pressures. The structure consists of:

- Reinforced concrete footing complying with AS 3600, with heel protruding under the retained soil, or toe protruding beyond the stem; and

- Reinforced concrete masonry stem complying with AS 3700, retaining the soil, and fixed via starter bars to the footing.

Cell Colour Convention	
Light green	Designer must confirm the value or input a new value at this point.
Light yellow	Results of calculations.
Yellow	Important results of calculations.
Turquoise	Factors against failure and results of design checks.
Purple	Information from AS 4678.
Brown	Information from NSW RTA Specification R 57.
Pink	Information from manufacturer.
Red	Information from manufacturer, subjet to modification.

To Use Spreadsheet
Click on and input values in each of the green cells only. The design value will appear in the cells immediately to the left of the green cells. In most cases, default values will appear in these cells if there is no input to the green cells. The design engineer must check and confirm the suitability of any default value before proceeding.

Surcharges and Horizontal and Vertical Line Loads
The software permits the consideration of various horizontal and vertical line loads and surcharges.

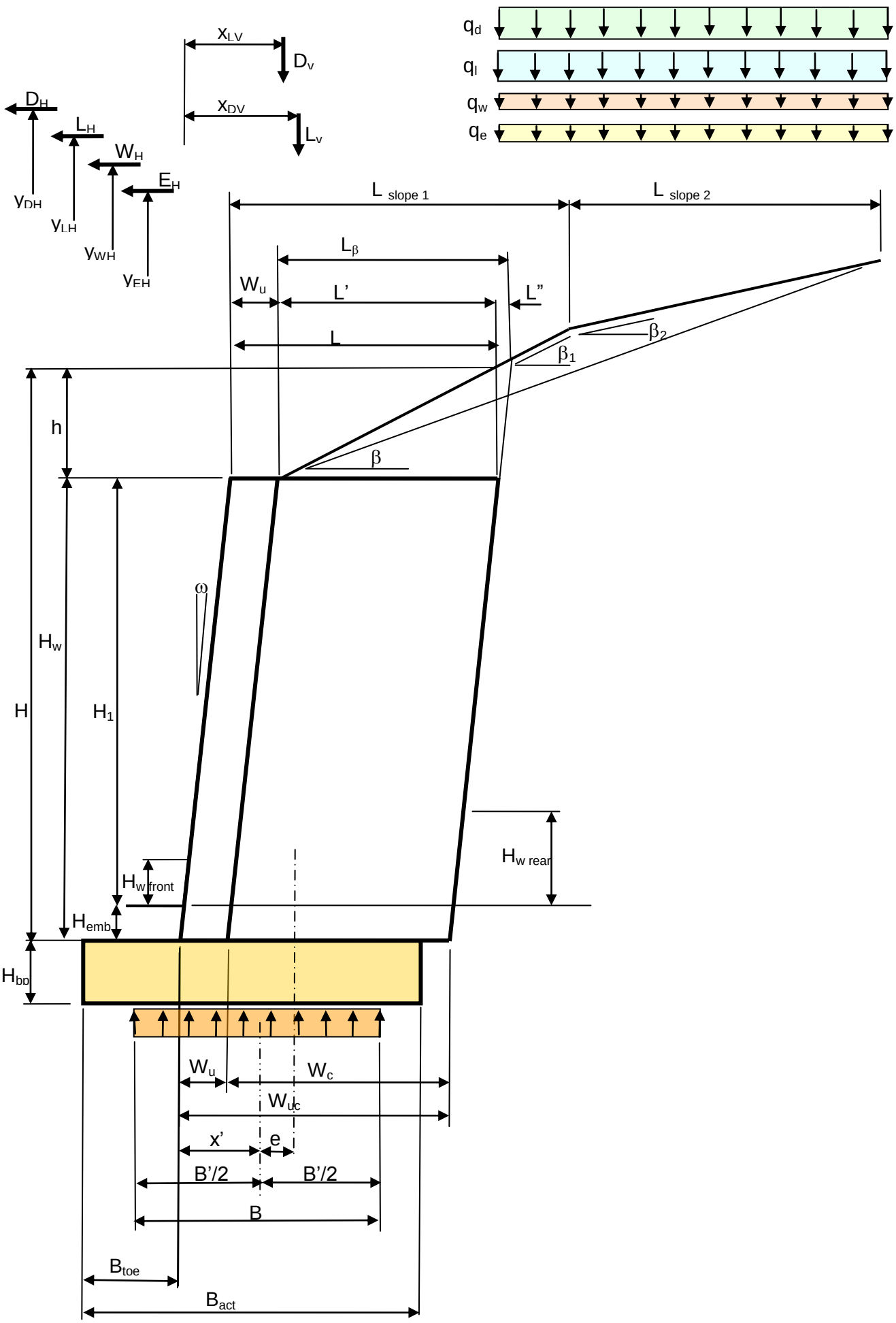
qd
ql
qw
qe
xLV
Dv
xDV
Lv
DH
LH
WH
EH
yDH
yLH
yWH
yEH
L slope 1
L slope 2
Lβ
Wu
L'
L"
L
β2
β1
h
β
ω
Hw
H
H1
Hw rear
Hw front
Hemb
Hbp
Wu
Wc
Wuc
x'
e
B'/2
B'/2
B
Btoe
Bact

Foundations and Bearing Pad Design

The software permits the consideration of bearing pads, used to spread the load and improve the foundation properties.

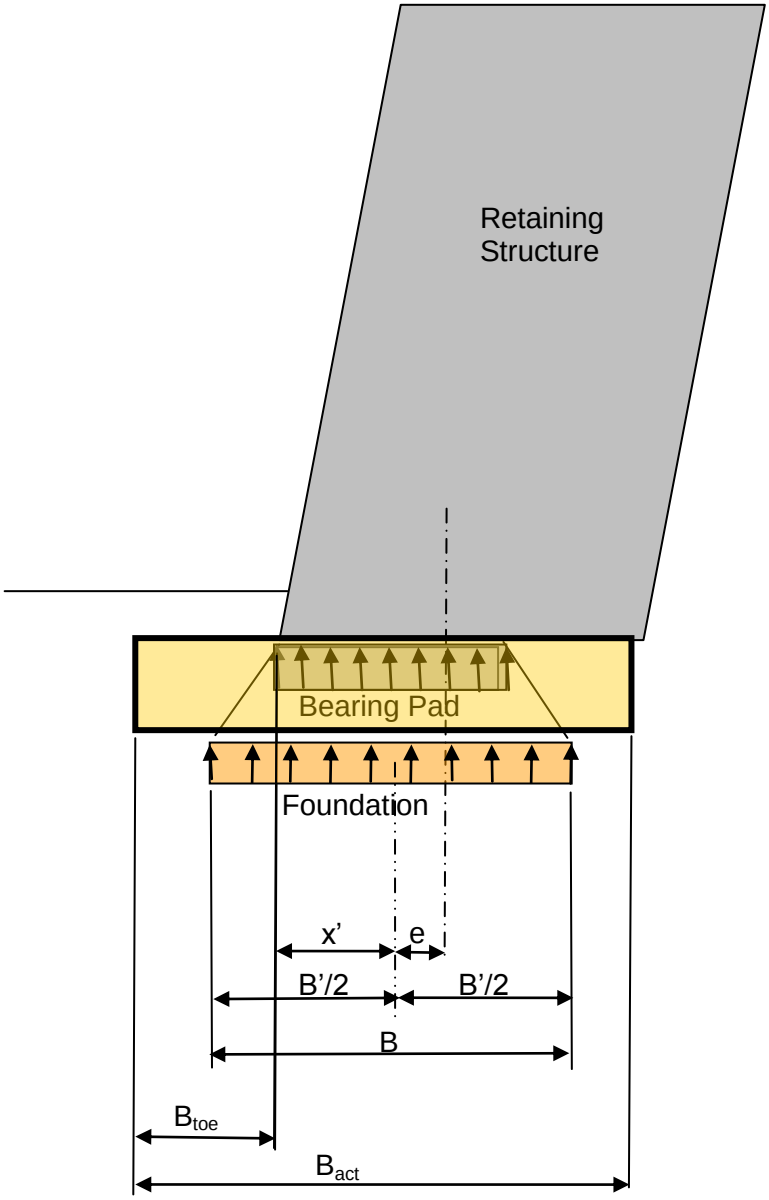

B

Worksheet - Generic

This work sheet is used to input general information, loads, load factors, materials factors and other parameters ***that are not input from the three specific retaining wall sheets***.

Apart for exposed retaining wall height, the principal inputs such as embedment, soil friction angles and the like must be input from the three specific retaining wall sheets.

INPUT

For most entries, default values are calculated. However, the design engineer must assume responsibility for checking and confirming, or changing, any default value.

CLIENT, PROJECT & DESIGN ORGANISATION

Client Organisation
Contact Name
Phone
Fax
Email
Project & Description
Retaining Wall Designation
Date
Design organisation
Design Engineer

EXPOSED HEIGHT OF RETAINING WALL

Only one wall type may be used. Enter the exposed height of the particular wall type.
Others must be zero.
Exposed Height of Reinforced Soils Structures
Exposed Height of Segmental Gravity Walls
Exposed Height of Reinforced Cantilever Gravity Walls

STRUCTURE CLASSIFICATION & PROXIMITY OF OTHER STRUCTURES FOR LOW PROBABILITY OF DAMAGE

Proximity to top limit for mobile (live) load
Proximity to top limit for fixed (dead) load
Proximity to base limit

EMBANKMENT GEOMETRY

Slope of retained soil close to retaining wall (measured from horizontal)
Slope of retained soil at distance from retaining wall (measured from horizontal)
Length of slope at wall
Length of slope at distance behind wall
Is water table present? (y/n)
Height of water table in front of wall (from soil surface at toe)
Height of water table behind wall (from soil surface at toe)

FENCES OR BARRIERS

Is there a fence or barrier on top of the wall? (y/n)
Height of fence or barrier

ENVIRONMENTAL CONDITIONS

Ambient temperature at surface

LOADS

Dead load vertical surcharge
Wind vertical surcharge
Earthquake vertical surcharge

Dead vertical line load
Live vertical line load
Dead horizontal line load
Live horizontal line load
Wind horizontal line load
Earthquake horizontal line load

POSITION OF LINE LOADS (Measured from ground level in front of embankment)
Height of horizontal line dead load
Height of horizontal line live load
Height of horizontal line wind load
Height of horizontal line earthquake load
Horiz lever arm to vertical line dead load
Horiz lever arm of vertical line live load

PERFORMANCE AND ENVIRONMENTAL REQUIREMENTS
Service life

EARTHQUAKE CONSIDERATIONS
Is earthquake included in the load case analysed?
Location
Acceleration coefficient
Site factor
Is a pseudo-static analysis to be performed? (Yes / No)

PARTIAL FACTORS ON LOADS
Live load combination factor for strength
Short term live load combination factor for serviceability
Long term live load combination factor for serviceability

Factor on overturning (active) soil loads
Factor on overturning dead loads
Factor on overturning live loads
Factor on overturning wind loads
Factor on overturning earthquake loads
Factor on resisting soil loads (passive & adhesion)
Factor on resisting dead loads
Factor on resisting live loads (eg over infill material)
Factor on water in tension cracks and groundwater

PARTIAL FACTORS ON SOIL PROPERTIES
Partial factors on tan(phi)
Partial factor for Class 1 controlled fill
Partial factor for Class 2 controlled fill
Partial factor for uncontrolled fill
Partial factor for in-situ natural soil
Partial factor for retained & infill soil (RTA only)
Partial factors on cohesion
Partial factor for Class 1 controlled fill
Partial factor for Class 2 controlled fill
Partial factor for uncontrolled fill
Partial factor for in-situ natural soil

PARTIAL FACTORS ON STABILITY
Required factor against stem overturning
Required factor against stem sliding
Required factor against base overturning

Required factor against bearing failure
Required factor against sliding

PARTIAL STRUCTURE CLASSIFICATION FACTOR
Structure classification factor
PARTIAL FACTORS ON GEOGRID STRENGTH
Geogrid type
Minimum (m) or characteristic (c)
Duration of test
Log cycles of extrapolation (0, 1, 2)
Backfill type (F = fine sand, C = coarse gravel)
Product uncertainty factor
Creep reduction factor
Extrapolation uncertainty factor
Construction damage factor
Thickness reduction factor
Strength reduction factor
Temperature reduction factor
Degradation factor (AS 4678 nominates 0.8 for all materials)
Global factor (if the above factors have been lumped together)

PARTIAL FACTORS ON SOIL/GEOGRID INTERACTION
Sliding uncertainty factor
Pullout uncertainty factor
Coefficient of sliding resistance
Coefficient of pullout resistance

PARTIAL FACTORS ON GEOGRID CONNECTION
Connection uncertainty factor

SOIL PROPERTIES
Check of friction angle for cohesionless siliceous sands and gravels
Angularity
Grading

FOUNDATION SOIL
Foundation control of fill
Foundation sliding resistance coefficient of foundation soil
Foundation partial factors on tan(f)
Foundation partial factors on cohesion, c
Foundation characteristic soil density
Foundation characteristic cohesion
Is base adhesion assumed to be zero? (y/n)
Foundation concrete/soil adhesion
Foundation nominated ultimate bearing strength
Foundation nominated working bearing strength
Is cohesion assumed to be zero for sliding resistance? (y/n)

INFILL SOIL
Infill control of fill
Infill partial factors on tan(f)
Infill partial factors on cohesion, c
Infill characteristic soil density
Infill characteristic cohesion
Infill design cohesion
Is base adhesion assumed to be zero? (y/n)
Infill concrete/soil adhesion

RETAINED SOIL
Retained soil control of fill
Retained soil partial factors on tan(f)
Retained soil partial factors on cohesion, c
Retained soil characteristic soil density
Retained soil characteristic cohesion
Orientation of failure plane

BEARING PAD MATERIAL
Bearing pad control of fill
Sliding resistance coefficient of levelling pad to other soil
Sliding resistance coefficient of levelling pad to smooth masonry
Bearing pad partial factors on tan(f)
Bearing pad partial factors on cohesion, c
Bearing pad characteristic soil density
Bearing pad characteristic internal friction angle
Bearing pad characteristic cohesion
Is base adhesion assumed to be zero? (y/n)
Bearing pad design internal friction angle
Bearing pad design cohesion
Nominated maximum ultimate bearing strength

Worksheet - Geogrid Properties Library - 1

This work sheet is used to record the geogrid properties, together with connection strengths and block/grid interface shear strengths.

Connection strength are based on test results.
Interface shear strengths are estimates of the friction angle based on limited data.

Each retaining may wall may incorporate up to four types of geogrid.
All geogrids selected should be from either "Ultimate" or Serviceability", but not from both simultaneously.

Worksheet - Reinforced Soil Structures RSS

This work sheet is used to design and analyse reinforced soil structures.

INPUT

For most entries, default values are calculated. However, the design engineer must assume responsibility for checking and confirming, or changing, any default value.

GENERAL

Is base friction required ?
Is base adhesion required ?
Is passive resistance required ?
Minimum geogrid length for low walls
Minimum geogrid length / Total height
Extra geogrid length to be specified
Extra geogrid length beyond failure plane
Wall embedment
Suggested trial geogrid total length
Base geogrid total length
Additional over trial length
Live load surcharge
Backfill slope (0.01=level, 9.46=1:6, 14.04=1:4)
Foundation friction angle
Retained soil friction angle
Infill friction angle
Length of slope at distance behind wall
Geogrid global factor F
Is the reinforced soil block effectively drained? (y/n)
Is the vertical component of active soil pressure considered? (y/n)
Is soil friction vert component load factor same as horiz? (y/n)
What proportion of potential facing/soil friction resistance is effective?
Is base friction required ?
Is base adhesion required ?
Is passive resistance required ?

FOR EACH GEOGRID LAYER

No of units (Separating the grids)
Geogrid type
Additional length of geogrid (if required) to provide suitable anchorage)

OUTPUT

The suitability of the design may be checked by ensuring that each of factors in the blue cells is greater than 1.0.
Is the density of the facing within 25% of drainage fill density
Is wall embedment sufficient
Is there sufficient sliding resistance of bearing pad?
Is there sufficient overturning resistance
Is there sufficient bearing capacity? (Bearing pad on foundation)
Is there sufficient bearing strength?
Is top geogrid more than 400 mm from the top?
Does geogrid have sufficient strength
Does geogrid have sufficient anchorage
Does unit/geogrid interface + geogrid 1 have enough shear strength
Does unit/geogrid interface have enough bulging shear strength
Does unit/geogrid interface have enough connection strength

Worksheet – Reinforced Cantilever Gravity

This work sheet is used to design and analyse reinforced concrete masonry cantilever gravity retaining walls.

INPUT

For most entries, default values are calculated. However, the design engineer must assume responsibility for checking and confirming, or changing, any default value.

GENERAL

Height of exposed stem
Live load surcharge
Backfill slope (0.01=level, 9.46=1:6, 14.04=1:4)
Foundation friction angle
Retained soil friction angle
Infill friction angle
Retained soil cohesion
Toe to stem
Stem below ground (Concrete hob height)
Design layback of wall
Bearing pad thickness
Specified distance from toe to centroid of reaction
Specified min toe-stem or heel-stem
Is the back face of fill assumed vertical or sloping (same as wall) v/s ?
Thin stem thickness
Thin stem effective depth
Thin stem reinforcement
Thin stem spacing of reinforcement
Thick stem thickness
Thick stem effective depth
Thick stem reinforcement
Thick stem spacing of reinforcement

BASE DIMENSIONS

Total footing width
Depth of key beneath base
Toe to stem
Base thickness
Is the base thicker than thick stem?
Toe to key
Key width
Nominated main reinforcement clear cover
Angle of tilt of "base"
Angle of toe to vertical
Angle of fill in front of toe
Specified distance from toe to centroid of reaction
Specified min toe-stem or heel-stem

BEARING PAD

Bearing pad (road base/cement stabilised/reinforced concrete (rb/cs/rc/nil)
Actual bearing pad width
Toe dimension of bearing pad
Depth to underside of bearing pad

WALL AND BASE DATA

Design layback of wall

THIN STEM DIMENSIONS

Manufacturer
Block description

Block code number
Block width
Block height
Block face shell minimum thickness
Block face shell taper
Height of thin stem

THICK STEM DIMENSIONS
Manufacturer
Block description
Block code number
Block width
Block height
Block face shell minimum thickness
Block face shell taper
Required cavity width
Cavity width

Supplementary Leaf
Manufacturer
Block description
Block code number
Block width
Block height
Block face shell minimum thickness
Block face shell taper

CONCRETE, BLOCK, GROUT, STEEL AND MORTAR AND PROPERTIES
Concrete strength
Concrete block strength
Concrete block characteristic shear strength
Grout strength
Steel yield strength
Mortar designation
Mortar height
Density of reinforced masonry
Density of concrete

THIN STEM REINFORCEMENT AND BLOCK PROPERTIES
Steel diameter
Spacing of bars (200, 400)
Minimum cover from shell/grout interface to face of steel
Nominated cover to steel centre line
Capacity reduction factor
Design width
Shear width

THICK STEM REINFORCEMENT AND BLOCK PROPERTIES
Steel diameter
Spacing of bars (200, 400)
Minimum cover from shell/grout interface to face of steel
Nominated cover to steel centre line
Capacity reduction factor
Design width
Shear width

BASE REINFORCEMENT AND CONCRETE PROPERTIES
Minimum cover to face of steel

OUTPUT
The suitability of the design may be checked by ensuring that each of factors in the blue cells is greater than 1.0.

SUMMARY - EXTERNAL DESIGN

At underside of base (or bearing pad) (base/foundation or base/bearing pad)
Is there sufficient sliding resistance?
Is there sufficient overturning resistance?
Is there sufficient bearing capacity?

At underside of base (or bearing pad) (base/foundation or base/bearing pad)
Is there sufficient sliding resistance?
Is there sufficient overturning resistance?
Is there sufficient bearing capacity?

At underside of key (or bearing pad) (base/foundation or bearing pad/foundation) (For active, key is considered part of wall)
Is there sufficient sliding resistance?
Is there sufficient overturning resistance?
Is there sufficient bearing capacity?

At underside of key (or bearing pad) (base/foundation or bearing pad/foundation) (For active, key is considered part of wall)
Is there sufficient sliding resistance?
Is there sufficient overturning resistance?
Is there sufficient bearing capacity?

SUMMARY - INTERNAL DESIGN

Thick Stem
Is there sufficient stem shear capacity?
Is there sufficient stem moment capacity?
Is there sufficient base moment capacity?

Thin Stem
Is there sufficient stem shear capacity?
Is there sufficient stem moment capacity?

Anchorage
Is there sufficient anchorage horizontally in base reo?
Is there sufficient anchorage vertically in starters?

DEVELOPMENT LENGTH FOR DEFORMED BARS IN TENSION
There is a further section on the development length for reinforcement.

Worksheet - Segmental Gravity Walls

This work sheet is used to design and analyse segmental gravity structures. It may be used for single walls or tiered systems.

INPUT

For most entries, default values are calculated. However, the design engineer must assume responsibility for checking and confirming, or changing, any default value.

General

Height of exposed stem
Lower & upper tiers
Live load surcharge
Backfill slope near wall (0.01=level, 9.46=1:6, 14.04=1:4)
Foundation friction angle
Retained soil friction angle
Infill friction angle
Retained soil cohesion
Is embankment tiered? (y/n)
Concrete behind facing
Angle of layback
Embedment Lower & Upper
Bearing pad width
Bearing pad thickness
Bearing pad toe to face of unit
Length of slope behind wall
Separation of tiers
Is soil friction vert component load factor same as horiz? (y/n)
What proportion of potential facing/soil friction resistance is effective?
Consider Rankine Bell?
Consider water in tension cracks?
Is base friction (structure-bearing pad) required ?
Is base adhesion (structure-bearing pad) required ?
Is passive resistance (structure-bearing pad) required ?
Is base friction (bearing pad-foundation) required ?
Is base adhesion (bearing pad-foundation) required ?
Is passive resistance (bearing pad-foundation) required ?
Distance from toe of facing to centroid of reaction, x' 3
Working stress distance from toe of facing to centroid of reaction, x''
Is the wall supported at the top?
External friction angle (to concrete surface) d i

Tiering and Layback

Is the embankment to be tiered? (y/n)
Exposed height of tier
Design layback of wall

Backfill

Is the wall designed for selected infill material (y/n)

Separation of tiers

Required horizontal separation/height of top tier
Horizontal separation of two tiers (face to face)
Required angle (lower toe to upper top from horizontal)
Required angle (lower heel to upper toe from horizontal)

Bearing Pad

Bearing pad (road base/cement stabilised/reinforced concrete (rb/cs/rc)
Bearing pad thickness
Bearing pad toe to face of unit
Slope of bearing pad/foundation interface

Embedment
Specified wall embedment

Facing Details
Brand of block
Designation
Proportion cores
Default angle of layback
Density of infill concrete
Density of fill within the unit
Proportion of cores filled
Mass of concrete behind the unit
Mass of one unit
Mass of fill within the unit
Height of one unit
Length of one unit
Width of one unit (depth into the embankment)
Is the base of the facing smooth or rough? (s/r)

OUTPUT
The suitability of the design may be checked by ensuring that each of factors in the blue cells is greater than 1.0.

Sliding
Bearing
Overturning (about toe)
Reaction / Base width x' / Bfacing
Is reaction within stem footprint?
Does bearing pad have sufficient bearing capacity?
Is there sufficient bearing strength under bearing pad?
Is there sufficient separation?
Is wall embedment sufficient?

Worksheet – Global Slip and Wedge
This work sheet may be used to check the horizontal load calculated by Coulomb wedges at various slopes of the failure plane

Worksheet – RSS Data 1
This work sheet is used to record the details of particular reinforced soils projects that have been analysed. This may be performed by clicking on the “Job Copy Button”.

Worksheet – Reinf Cantilever Data 1
This work sheet is used to record the details of particular reinforced concrete masonry cantilever gravity retaining walls that have been analysed. This may be performed by clicking on the “Job Copy Button”.

Worksheet – Seg Grav Data 1
This work sheet is used to record the details of particular segmental gravity retaining walls that have been analysed. This may be performed by clicking on the “Job Copy Button”.

PART 2
Specifications

The following generic specifications may be of assistance in providing a comprehensive design.

The designer should periodically consult the Island Block and paving website to determine the most recent amendments to this generic specification.

RETAINING WALLS

Use of the Specification and Drawings
This sample specification and the associated drawings are prepared in electronic format, with the express intention that designers will edit them to suit the particular requirements of specific construction projects. The design, construction and costing of structures must be carried out by qualified and experienced architects, engineers and builders. The authors, publishers and distributors of this specification and the associated drawings do not accept any responsibility for incorrect, inappropriate or incomplete use of this information.

This sample specification and the associated drawings are prepared in the context of the national Building Regulations. Architects, engineers and builders should make themselves aware of any recent changes to these documents, to any Standards referred to therein or to local variations or requirements. The authors, publishers and distributors of this specification and the associated drawings do not accept any responsibility for failure to do so.

This sample specification and the associated drawings include product information provided by particular suppliers. Architects, engineers and builders should satisfy themselves that information on specific products is correct, by contacting the particular suppliers. The authors, publishers and distributors of this specification and the associated drawings do not accept any responsibility for incorrect information provided by product suppliers.

Basis of the Specification and Drawings
In the preparation of these specifications and drawings, the following convention has been adopted.

- All building design and construction must comply with the relevant Building Regulations and any relevant Standards referred to therein.
- If the construction is not covered by the Building Regulations, then it shall comply with any appropriate Standard.
- If the construction is not covered by either Building Regulations or Standards, construction should comply with a balanced combination of current practice, engineering principles and supplier's information.

Using this Specification
To prepare a working specification for a particular contract, delete this front page and edit the following pages in accordance with the convention below. "Copy and paste" this draft specification into the Project Specification for the particular project, and edit accordingly.

The most common generic specifications are show towards the beginning of this document, with more specialised specifications towards the end. Use the "cut and paste" and/or "delete" options to move or remove particular blocks of text.

	Background
White	General specification
Light yellow	Materials specification
Light green	Specification for enhanced in-service sustainability over common construction
Text Highlighting	
Nil	Generic specification that may not need to be edited
Yellow	Specification that should be edited (or deleted)
Grey	Useful information that may be deleted

General Sustainability Requirements
When a product or system is claimed to be "Sustainable", the Supplier shall make available a Sustainability Statement that clearly indicates how its use will lead to one or more of the following:

- Reduction green-house gas generation, which causes global warming; or
- Reduction in the use of non-renewable resources upon which our society depends; or
- Reduction in land, water or air pollution or degradation, which alienate the use of these resources.

SPECIFICATION – RETAINING WALLS – EARTHWORKS AND DRAINAGE

Scope
This section covers general considerations, earthworks and drainage for construction of earth retaining walls. It should be read in conjunction with the detailed specification for the particular type of retaining wall superstructure.

Building Regulations and Standards

All materials and construction shall comply with the most recent version of:

- the relevant parts of the Building Regulations;
- the Standards referred to therein;
- other Standards nominated in this specification; and
- other relevant Regulations.

Relevant Standards
..AS 4678 Earth retaining structures
..AS 2758.1 Aggregates and rock for engineering purposes - Concrete aggregates
..AS 2001.2.3 Methods of test for textiles - Determination of breaking force and extension of textile fabrics
..AS 3706.2 Geotextiles method of test - Determination of tensile properties – Wide strip method
..AS 3706.3 Geotextiles method of test - Determination of tearing strength - Trapezoidal method
..AS 3706.4 Geotextiles method of test - Determination of burst strength - California bearing ratio plunger method
..AS 3706.7 Geotextiles method of test - Determination of pore size distribution - Dry sieving method
..AS 3706.9 Geotextiles method of test - Determination of transmissivity
..AS 3798 Guidelines on earthworks for commercial and residential developments

Commencement

Work shall commence as soon as practical after, but not before,
(a) The Builder has issued:

- a written order
- the relevant contract drawings, specifications and schedule of work
- written approval of any details provided by the Contractor

(b) All adjacent earthworks are complete, profiles and benchmarks are established.

Definitions
The following definitions are used in this specification.

- Dry Density - The calculated density of soil, if there were no water in the voids.
- Moisture Content - The mass of the water in the voids divided by the mass of the dry soil, expressed as a percentage.
- Saturation Line (0 % Voids) - The line representing the dry density at various moisture contents, if no air is present.
- Optimum Moisture Content (OMC) - The moisture content at which the soil can achieve its maximum dry density during the test.
- Standard Compaction - The dry density a soil would adopt if compacted in three layers in a steel mould of volume 94,440 mm^3 (102 mm diameter x 117 mm high cylinder) at various moisture contents by 25 blows of a 2.5 kg hammer dropped 305 mm.
- Modified Compaction - The dry density a soil would adopt if compacted in three layers in a steel mould of volume 94,440 mm^3 (102 mm diameter x 117 mm high cylinder) at various moisture contents by 25 blows of a 4.5 kg hammer dropped 457 mm.
- Cohesionless soil – Poorly graded sand and gravel mixtures, with less than 5% finer than 75 microns, and without a well-defined moisture-density relationship.
- Cohesive soil – Soils with a well defined moisture-density relationship, including silts, clays and the like.

Safety and Protection of Existing Structures
All excavations shall be carried out in a safe manner in accordance with the relevant regulations, to prevent collapse that may endanger life or property. Before major excavation and shoring is undertaken, a survey of cracks in adjacent building shall be undertaken and recorded.

In the absence of regulations to the contrary, the following may be applied where

- Excavation is performed and remains open only in dry weather,
- There is no significant ground water seepage,
- The excavation remains open for no longer than two weeks,
- The back slope of the natural ground does not exceed 1 vertical in 6 horizontal,
- Bedding planes do not slope towards the cut, and

- There are no structures founded within a zone of influence defined by a line from the toe of the cut at 30 degrees for cohesionless material and 45 degrees for other material.

Natural material	Maximum height of cut, m	Maximum permissible unpropped batter, Vert : Horiz
Stable rock, sandstone, firm shale etc where bedding planes do not slope towards the excavation	0 to 3.2 m	1 : 0.4
	Over 3.2 m	Seek advice of Engineer
Materials with both significant cohesion and friction in its undisturbed natural compacted state	0 to 2.6 m	1 : 0.8
	Over 2.6 m	Seek advice of Engineer
Cohesive soils, e.g. clay, silts	0 to 2.0 m	1 : 1.2
	Over 2.0 m	Seek advice of Engineer
Cohesionless soils, e.g. Loose gravel, sand	0 to 1.4 m	1 : 1.6
	Over 1.4 m	Seek advice Engineer

In all other cases, the advice of the Engineer shall be sought.
Adjacent structures must be founded either beyond or below the zone of influence. Where there is risk of global slip around a slip plane encompassing the proposed retaining wall or other structures, or where there is risk of inundation by ground water or surface water, retaining wall construction shall not proceed until remedial action has been carried out.

Temporary Shoring of Excavations
All temporary shoring shall comply with drawings and specifications produced by a suitably qualified and experienced Civil Engineer based on geotechnical advice. Consideration shall be given to the settlement effects from the removal of ground water by de-watering the site.

Foundation and Bearing Pad

A qualified and experienced Geotechnical or Civil Engineer shall determine the capacity of the foundation material to resist global slip and to simultaneously support the horizontal and vertical loads, noted in the design schedule annexed to this specification. This shall be assessed when the excavation has revealed the nature and extent of the foundation material.

Unless varied by the Geotechnical or Civil Engineer, the foundation material shall have the properties set out in the design schedule annexed to this specification.

If the existing foundation material does not have these properties or has insufficient friction angle and cohesion to provide the requisite sliding and bearing capacity, it shall be removed and be replaced with an enlarged bearing pad with the following properties.

Lean-mix concrete
Mass concrete with a compressive strength f'_c of not less than 15 MPa; or

Cement-Stabilized Crushed Rock
Crushed rock conforming with the specification below with an additional 5% by mass of GP Portland cement thoroughly mixed, moistened and compacted; or

Compacted Crushed Rock
- Compacted density such that a conservative estimate of the mean is at least 2000 kg/m^3
- Effective internal friction angle such that a conservative estimate of the mean is at least 35°
- Effective cohesion such that a conservative estimate of the mean is at least 3 kPa.

A well-graded low plasticity crushed rock complying with the following specification is deemed satisfactory for this application.

Nominal Size	20 mm
AS Sieve	% Passing
26.5 mm	100
19.0 mm	95 -100
13.2 mm	78 - 92
9.5 mm	68 - 83
4.75 mm	44 - 64
2.36 mm	29 - 47
425 □m	12 - 20
75 □m	2 – 6

Liquid Limit not exceeding 20.
Plasticity Index not exceeding 6.

Compaction shall be by mechanical plate vibrator to a minimum of 100% Standard Compaction. Where there are significant variations of foundation material or compaction, soft spots, or where there is ponding of ground water, the material shall be removed, replaced and compacted in layers not exceeding 150 mm at a moisture content within 2% of Optimum Moisture Content (OMC) to achieve 100% Standard Compaction.

Trenches and footing excavations shall be dewatered and cleaned prior to placement of drainage material or footings such that no softened or loosened material remains. Place and compact the material in layers not exceeding 150 mm, to make up the levels. The levels beneath the wall shall **not** be made up with bedding sand or other poorly graded granular material that may permit ground water to permeate under the base of the retaining wall, except where drainage material is specified and an adequate drainage system is designed.

Retained Soil
The retained material shall have the properties set out in the annexure to this specification. If the existing retained material, within an envelope at 45° (1 : 1 batter) from a point 300 mm behind proposed heel of the structure, does not have these properties or has insufficient friction angle and cohesion to remain stable at the design batter, it shall be removed and replaced with a material that is stable. Material with the following properties is deemed to be satisfactory:

- Compacted density such that a conservative estimate of the mean is at least 1900 kg/m^3
- Effective internal friction angle such that a conservative estimate of the mean is at least 32°
- Effective cohesion such that a conservative estimate of the mean is at least 3 kPa.

These properties may be achieved by modification of suitable site materials (as advised by a suitably qualified Geotechnical Engineer) provided the properties are not injurious to any of the other materials in the structure.

Drainage System
The drainage system shall consist of:

- A permeable wall facing system.
- A permeable drainage layer not less than 300 mm wide adjacent to the stem of the wall.
- A 100 mm slotted PVC agricultural pipe, or equivalent system, draining to the storm water system
- For applications with high water table, 200 mm wide geocomposite strips at 2.0 m centres at the existing 1 : 1 batter, connected to the agricultural pipe drainage system.

Constructing Drainage Fill
Drainage fill shall be:

- Placed and compacted, by mechanical plate vibrator, to a minimum of 95% Standard Compaction
- Above and beside the drainage pipe with a minimum cover of 150 mm
- Behind the wall to a minimum width of 300 mm to within 300 mm of the top
- Protected by a geotextile envelope that completely isolates the drainage fill from the retained fill
- Adequately drained away from the retaining structures by the drainage system.

Constructing the Drainage System

The drainage pipe shall be positioned in the drainage fill at a minimum uniform grade of 1 in 100 over a length not exceeding 15 metres. It shall be connected to the storm-water system at the lower end of each run and shall drain positively away from base of the retaining wall. The drainage pipe shall be brought to the surface at the upper end of each run to facilitate future flushing, capped and its positioned marked.

Sub-surface Drainage
Sub-surface drainage shall comply with the Drawings, Building Regulations and relevant Standard. Unless stated otherwise, sub-surface drainage shall consist of one of the following: • Slotted PVC agricultural pipe, of diameter nominated on the drawings and not less than 100 mm; or • Polypropylene drainage cell, of diameter nominated on the drawings and not less than 30 mm. Depending on the volume of groundwater expected, assessed by the Engineer at the time of construction, a geotextile sock may be required. If required, geotextiles shall comply with the specification "Geotextiles for Filters and Drains". More details…click here
Sustainability Specification Sub-surface Drainage shall: • effectively reduce soil erosion; and/or • effectively trap and treat contaminants rather than allowing them to run off or be dumped.

Drainage Void

Drainage void systems for permanent voids between the concrete slabs or pavements and the soil profile shall comply with the Drawings, Building Regulations and relevant Standard. Unless stated otherwise, drainage void shall consist of rigid plastic drainage cell in conjunction with a geotextile, such that:

- It does not clog
- Provides a continuous minimum void of 25mm
- Will not collapse or distort under design loads nominated by the designer, and not less than the values shown below.
- Geotextile shall comply with the specification "Geotextiles for Filters and Drains".

Strength Requirements for Drainage Void

Application	Minimum design pressure [Note 1] kPa	Minimum compressive strength kPa
Under a concrete slab or other similar rigid covering, subject to pedestrian loading only	125	400
Under a pavement subject to light vehicular traffic (up to 3 tonne vehicle)	250	750
Under a pavement subject to vehicular traffic up to the legal limit	500	1,500

Notes

- Uniform pressure is to be applied over an area not less than 200 mm x 200 mm.

More details…click here

Sustainability Specification

Drainage Void shall:

- effectively reduce soil erosion; and/or
- effectively trap and treat contaminants rather than allowing them to run off or be dumped.

Geocomposites

Geocomposites shall comply with the Drawings, Building Regulations and relevant Standard (..AS 3706). Unless stated otherwise, geocomposites shall exhibit:

- Sufficient permeability to maximise the amount of water passing through the outer surface
- Sufficient void size, under load, to convey the required water flow to the stormwater system.
- Pore size small enough to block fine material from entering the drainage system, without compromising the permeability requirements
- Strength, toughness and abrasion resistance to resist damage during construction and service

Geocomposites shall comply with the specification "Geotextiles for Filters and Drains".

More details…click here

Sustainability Specification

Geocomposites shall:

- effectively reduce soil erosion; and/or
- effectively trap and treat contaminants rather than allowing them to run off or be dumped.

Notes:

Permeability, Permittivity and Flow

The permeability test measures the water flow through a sample of the subject geotextile under constant head

- Thickness of the sample t
- Head during test h = 100 mm
- Flow rate under 100 mm of head Q100
- Permittivity $\psi = Q_{100} / h$
- Permeability $k = \psi t$

Flow may be unidirectional (only perpendicular to the geotextile) or may be multidirectional. This specification deals only with unidirectional flow and does not deal with problem soils. Several authors (Calhoun, Ogink, McKeand, Giroud, Schober and Teinol) provide recommendations for specifying the permeability, k, of a filter, ranging from 0.1 to 10 times the permeability of the soil. This will depend in part, on whether the soil is particularly coarse or particularly fine. In this specification, a value permeability, k, of the geotextile not less than 1 times the permeability of the soil has been adopted. In the case of important structures, or those where the permeability of the geotextile is critical, more precise methods and different specifications should be employed. This specification is not suitable for fine clay, and may not match the flow of water through coarse sands and gravels. The designer must consider variations to this specification in these circumstances.

Opening Size

Several authors provide recommendations for determining the maximum opening size of a filter. To prevent piping

(drawing of fine soil particles into the filter), Calhoun recommends that the O_{95} of the geotextile filter should be not more than the D_{15} of coarse soils and not more than 200 µm of cohesive soils. The general limits adopted in this specification are as follows:

- For cohesive soil (D_{20} soil ≤ 75 µm), O_{95} geotextile should be between 150 µm and 250 µm.
- For non-cohesive soil (D_{20} soil > 75 µm), O_{95} geotextile should be between 80 µm and 250 µm.

To minimize clogging of a geotextile filter, the O_{95} opening size should be not less than 3 times the D15 of the soil. An alternative specification to minimize clogging is to require the Austroads G Rating (if available) to be less than 3.

Geotextiles for Filters and Drains

Geotextiles for filters and drains shall comply with the Drawings, Building Regulations and relevant Standard (..AS 3706). Unless stated otherwise, geotextiles for filters and drains shall exhibit:

- Sufficient permeability to maximise the amount of water passing through the outer surface
- Sufficient void size, under load, to convey the required water flow to the stormwater system.
- Pore size small enough to block fine material from entering the drainage system, without compromising the permeability requirements
- Strength, toughness and abrasion resistance to resist damage during construction and service

Geocomposites shall comply with the specification "Geotextiles for Filters and Drains".

Function	Filter and drainage	
Typical location	Drain soil behind retaining walls and structures	
Protection to geotextile	The geotextile shall be protected against tear or puncture. Note 2	
Soil Type Note 1	Cohesive and other fine grained soils such as silts and some clays Note 3	Cohesionless soils such as some sands Note 3
Where required by the Engineer...Minimum Wide Strip Tensile Strength shall be as high as practical, but not less than ….. Note 2	7.5 kN/m	7.5 kN/m
Minimum Trapezoidal Tear Strength shall be as high as practical, but not less than .. .. Note 2	210 N	210 N
Where required by the Engineer...Minimum CBR Burst Strength shall be as high as practical, but not less than …….. Note 2	1,500 N	1,500 N
Pore Size O_{95} by dry sieving, shall be in the range ……..	150 □m to 250 □m	80 □m to 250 □m
Permittivity, shall be as high as practical, but not less than ……	2.0 sec^{-1}	0.7 sec^{-1}
Flow Rate under 100 mm Head shall be as high as practical, but not less than ……	100 $l/m^2/sec$	70 $l/m^2/sec$
Coefficient of Permeability shall be as high as practical, but not less than ……. Note 3	0.00001 m/sec (1×10^{-5} m/sec)	0.003 m/sec (3×10^{-4} m/sec)

Notes

1. This specification does not apply to "problem soils", defined as exhibiting one or more of the following:
   - Silty soils with hydraulic gradients greater than 3
   - Widely graded or gap graded particle size distribution
   - Dispersive clays and silts
   - Uniform silts and sands with a coefficient of uniformity under 3

2. The geotextile shall be protected against tear or puncture by either :
   - Avoiding fill with sharp angular aggregate, heavy compaction (over 95% standard) and fill depths over 3.0 m, or
   - Providing a protective layer of drainage aggregate not less than 50 mm thick

   If these criteria are not met, the specified strength properties must be at least doubled.

3. In this specification, permeability, k, of the geotextile not less than 1 times the permeability of the soil has been adopted. In the case of important structures, or those where the permeability of the geotextile is critical, more precise methods and different specifications should be employed. This specification is not suitable for fine clay, and may not match the flow of water through coarse sands and gravels. The designer must consider variations to this specification in these circumstances. More details…click here

Sustainability Specification

Geotextiles for Filters and Drains shall:

- effectively reduce soil erosion; and/or
- effectively trap and treat contaminants rather than allowing them to run off or be dumped.

Protection Boards
When protection boards are required to prevent damage to waterproof membranes and/or drainage cells from backfilling, they shall be manufactured in a material that is inert and non-reactive to water, soils and chemicals. More details…click here
Sustainability Specification Protection Boards shall: • Effectively contribute to the reduction of soil erosion; and/or • Effectively contribute to the trapping and treatment of contaminants rather than allowing them to run off or be dumped.

Drainage Fill
Drainage fill material shall comply with the Drawings, Building Regulations and relevant Standard (AS 2758.1). Unless stated otherwise, drainage fill material shall be GP (poorly graded gravel) single sized gravel of nominal size 10 mm to 20 mm complying with the following specification. Sieve — Percent Passing 26.5 mm — 100 19.0 mm — 70 - 100 13.2 mm — 0 - 100 9.52 mm — 0 – 0 More details…click here

Waterproofing

Positive Side Surface Sealing of Masonry Retaining Walls
(Refer to specification for Painting & Coatings)

Negative Side Surface Sealing of Masonry Retaining Walls
(Refer to specification for Painting & Coatings)

SPECIFICATION - REINFORCED SOIL STRUCTURES AND SEGMENTAL GRAVITY RETAINING WALLS

Scope
This section covers the construction of reinforced soil structures (compacted soil incorporating geogrids, or similar, and a facing) and segmental gravity retaining walls (consisting of a segmental facing, with or without encapsulated aggregate, soil or no-fines concrete to provide additional mass). It excludes cantilever gravity walls, cantilever post and whaler retaining walls and sheet-pile retaining walls.

Building Regulations and Standards

All materials and construction shall comply with the most recent version of:

- the relevant parts of the Building Regulations;
- the Standards referred to therein;
- other Standards nominated in this specification; and
- other relevant Regulations.

Relevant Standards
..AS 4678 Earth retaining structures
..AS 2758.1 Aggregates and rock for engineering purposes - Concrete aggregates
..AS 3798 Guidelines on earthworks for commercial and residential developments
..AS/NZS 4455.3 Masonry units and segmental pavers – Part 3 Segmental retaining wall units
..AS 3600 Concrete structures

Commencement

Work shall commence as soon as practical after, but not before,
(a) The Builder has issued:

- a written order
- the relevant contract drawings, specifications and schedule of work
- written approval of any details provided by the Contractor

(b) All adjacent earthworks are complete, profiles and benchmarks are established.

Earthworks and Drainage
The earthworks and drainage for all retaining walls shall comply with Specification:
"RETAINING WALLS – EARTHWORKS AND DRAINAGE"

Constructing Geogrid Reinforced Soil Block
Geogrids shall:

- Be of the type and index strength nominated in the design schedule,
- Cover the whole of the plan area behind the wall for the specified anchorage length,
- Be a single length (i.e. not lapped) in the direction of design tension,
- Be lapped with adjacent geogrids in accordance with the manufacturer's instructions, but not less than 300 mm
- Be connected to the facing in accordance with the manufacturer's instructions, across the whole width of the facing.
- Be installed under tension applied by a system of stakes that shall remain in place until the geogrids are covered by at least 150 mm of infill material.

Infill material shall be:

- Placed, spread and compacted in a manner that eliminates wrinkles in the geogrid or movement of the facing units,
- Placed and compacted in layers equal to the height of the facing units, but not exceeding 200 mm in thickness, at a moisture content within 2% of Optimum Moisture Content (OMC) to achieve 95% Standard Compaction.

Infill material within 1.0 metre of the rear face of the retaining wall facing units shall be placed and compacted by at least three passes of a lightweight mechanical plate, tamper or roller at a moisture content within 2% of Optimum Moisture Content (OMC) to achieve 90% Standard Compaction.

Tracked construction equipment shall not be operated directly on the geogrids or on infill material cover less than 150 mm. In order to avoid disruption of the geogrids, tracked construction equipment shall not be turned on the infill material. Rubber tyred equipment may be used on the geogrids provided it is operated in accordance with the geogrid manufacturer's instructions, without sudden braking and turning and at speed less than 6 kilometres per hour.

Constructing Segmental Gravity Retaining Walls

Segmental concrete facing blocks shall be installed on the levelling pad or footing such that the resulting wall has a backward slope as specified on the drawings, but not less than 1 in 40.

The units of successive courses shall be stacked in stretcher bond. In high walls that are curved in plan, it may be necessary to compensate for joint creep in the upper courses (the longitudinal translation of joints along the wall where the radius of curvature increases or decreases).

Constructing No-fines Concrete
During placement of no–fines concrete, the water/cement ratio shall be maintained in the range 0.35 to 0.5 (0.4 preferred). No-fines concrete shall be placed into position by bucket or similar and rodded to ensure that is fills all voids. Care shall be taken to ensure that the facing is not dislodged by the pressure of the no-fines concrete.

Constructing Bulk Fill Material
Bulk filling material shall be placed and in layers not exceeding 200 mm at a moisture content within 2% of Optimum Moisture Content (OMC) to achieve 85% Standard Compaction.

At the end of each day's construction, the infill material shall be sloped such that any rainwater is directed away from the face of the retaining wall and to a temporary (or permanent) drainage system.

Constructing Surface Sealing Material and Catch Drain
Where required by an engineer...The whole of the disturbed fill surface shall be sealed and drained by compacting a layer of surface sealing material at least 300 mm thick and in accordance with the relevant Standard (or AS 4768).

The drainage shall shed water away from the back fill and away from the toe of the retaining wall. This may be achieved by constructing a 100 mm deep catch drain to drain to the site drainage system at a minimum slope of 1 in 100.

Constructing Capping
The top facing unit or capping unit shall be bonded to the facing units below using an adhesive.

Tolerances
Unless specified otherwise for reasons of aesthetics or by the client or architect, all construction shall be within the following tolerances:

Element	Vertical Position	Horizontal Position	Vertical Alignment	Horizontal Alignment
Soil surface	100 mm	-	-	-
Facings & wall structures	50 mm	50 mm	20 mm in 3.0 m	20 mm in 3.0 m
Footings & supports	50 mm	50 mm	20 mm in 3.0 m	20 mm in 3.0 m

Concrete Retaining Wall Blocks

Concrete retaining wall blocks shall comply with the Drawings, Building Regulations and relevant Standard (..AS/NZS 4455.3). Unless stated otherwise, properties shall be not less than:

- Dimensional category DW4
- Salt attack resistance grade of
    - General Purpose where salt attack is unlikely
    - Exposure Grade where the retaining wall is in aggressive soils, in areas subject to salt damp or in marine environments
- Minimum characteristic compressive strength shall be 10 MPa for dry-stacked concrete blocks
- Colour and texture shall be within an agreed range
- Concrete blocks shall have efflorescence potential of nil or slight

More details…click here

Definitions

- Dimensional Category DW4 - For a sample of 20 units, the standard deviation of work sizes shall be not more than 2 mm, and the difference between the mean and the work size shall be not more than 3 mm. For tightly interlocking retaining wall units, tighter tolerances are applicable, such that when 5 units are stacked on top of each other on a flat surface, the slope of the top surface shall be not greater than 1 in 50. For split faces, the dimensional deviations shall not apply to the width of the unit, provided the average width is not less than 90% of the work size.
- General Purpose Salt Attack Resistance Grade - Performance such that it is possible to demonstrate that the product has a history of surviving under non-saline environmental conditions similar to those existing at the site considered, but not expected to meet the mass loss criterion for Exposure Grade Salt Attack Resistance Grade.
- Exposure Grade Salt Attack Resistance Grade - Performance such that it is possible to demonstrate that the product has a history of surviving under saline environmental conditions similar to those existing at the site considered; and less than 0.2 grams mass loss in 40 cycles in AS/NZS 4456.10, Method B test.

Concrete Crib Blocks

Concrete retaining wall blocks shall comply with the Drawings, Building Regulations and relevant Standard (..AS/NZS 4455.3, ..AS 3600 Section 4 [durability]). Unless stated otherwise, properties shall be not less than:

- Dimensional category DW4
- Salt attack resistance grade of Exposure Grade
- Minimum characteristic compressive strength shall be 25 MPa

Concrete crib blocks usually incorporate reinforcement, which must be protected from corrosion. This can be done by ensuring that the concrete has sufficient strength (and cement content) and there is sufficient concrete cover around the reinforcement.

Definitions

- Dimensional Category DW4 - For a sample of 5 units, the standard deviation of work sizes shall be not more than 2 mm, and the difference between the mean and the work size shall be not more than 3 mm. For tightly interlocking retaining wall units, tighter tolerances are applicable, such that when 5 units are stacked on top of each other on a flat surface, the slope of the top surface shall be not greater than 1 in 50. For split faces, the dimensional deviations shall not apply to the width of the unit, provided the average width is not less than 90% of the work size.
- Exposure Grade Salt Attack Resistance Grade - Performance such that it is possible to demonstrate that the product has a history of surviving under saline environmental conditions similar to those existing at the site considered; and less than 0.2 grams mass loss in 40 cycles in AS/NZS 4456.10, Method B test.

Concrete Revetment Blocks

Concrete revetment blocks shall comply with the Drawings, Building Regulations and relevant Standard (..AS/NZS 4455.3). Unless stated otherwise, Concrete revetment blocks shall be:

- Dimensional category DW4
- Salt attack resistance grade of Exposure Grade
- Minimum characteristic compressive strength shall be 20 MPa

More details…click here

Definitions

- Dimensional Category DW4 - For a sample of 5 units, the standard deviation of work sizes shall be not more than 2 mm, and the difference between the mean and the work size shall be not more than 3 mm. For tightly interlocking retaining wall units, tighter tolerances are applicable, such that when 5 units are stacked on top of each other on a flat surface, the slope of the top surface shall be not greater than 1 in 50. For split faces, the dimensional deviations shall not apply to the width of the unit, provided the average width is not less than 90% of the work size.
- Exposure Grade Salt Attack Resistance Grade - Performance such that it is possible to demonstrate that the product has a history of surviving under saline environmental conditions similar to those existing at the site considered; and less than 0.2 grams mass loss in 40 cycles in AS/NZS 4456.10, Method B test.

Permeable Blocks For Segmented Gravity Retaining Walls

Permeable concrete blocks for segmented gravity retaining walls shall comply with the Drawings, Building Regulations and relevant Standard (..AS/NZS 4455.3). Unless stated otherwise, permeable concrete blocks shall:

- Consist of no-fines concrete with a crushed rock aggregate size of 12 to 20 mm
- Characteristic compressive strength greater than 10 MPa
- Density between 1600 and 1800 kg/m^3, and may include a facing as required.

More details…click here

No-fines Concrete Infill

No-fines concrete infill placed behind retaining walls shall be free-draining, allowing water to pass readily through it to the drainage system. In its unhardened state, no-fines concrete shall have low slump and shall not exert a lateral pressure in excess 4 kPa per metre depth on the retaining wall facing restraining it. No-fines concrete used to provide enhanced stability to a retaining wall shall have a bulk density not less than 1800 kg./m^3. No-fines concrete shall form a coherent mass, capable of adhering to the retaining wall facing.

No-fines concrete meeting the following specification is deemed satisfactory for this application.

- Aggregate to GP cement ratio shall be not greater than 6 : 1 (by volume).
- Aggregate shall be GP (poorly graded) nominal 20 mm crushed rock aggregate (with all particles in the range 12 mm to 20 mm).
- Compressive strength shall be not less than 10 MPa.

More details…click here

Soil Infill

Soil infill shall meet the following specification:

- Compacted density angle such that a conservative estimate of the mean is at least 2000 kg/m^3
- Effective internal friction angle such that a conservative estimate of the mean is at least 35°
- GW (well-graded gravel) or SW (well-graded sand)
- **These properties may <u>not</u> be achieved by the inclusion of cement or lime in site material.**
- pH (for polyester geogrids) between 4 and 9
- Plasticity Index shall not exceed 12%.
- Liquid Limit shall not exceed 30%.
- Coefficient of uniformity = D_{60}/D_{10} shall exceed 5, where D_{6o} and D_{10} are the equivalent sizes in millimetres as interpolated from the particle size distribution curve through which 60% and 10% of the material passes respectively.
- Grading within the following range:

Sieve	Percent Passing
26.0 mm	100
19.0 mm	40 - 100
13.2 mm	30 - 100
9.5 mm	25 - 100
6.70 mm	22 - 100
4.76 mm	18 - 100
2.36 mm	15 - 85
1.18 mm	12 - 70
600 microns	10 - 55
300 microns	6 - 40
150 microns	3 - 26
75 microns	0 - 15
2 microns	0

More details…click here

Geogrids

Geogrids shall comply with the Drawings, Building Regulations and relevant Standard (..AS 4678). Geogrid type and index strength shall be as nominated in the Drawings.

More details…click here

Adhesive

Adhesive used to bond the capping units shall comply with the Drawings, Building Regulations and relevant Standard (..AS 4678). Unless stated otherwise, adhesive shall be a flexible two-part epoxy-based adhesive.

More details…click here

Surface Sealing Material

The material used to seal the surface of the fill shall be compacted clay.

Alternatively, a 0.2 mm thick PVC membrane or a needle-punched bentonite liner overlaid by at least 150 mm of bulk fill material may be used in lieu of the clay.

More details…click here

Bulk Fill Material

Bulk fill material shall be uniform and of maximum particle size of 100 mm.

More details…click here

Inspections

All new work shall remain open until it has been inspected and approved by the Engineer. The following inspections shall be performed:

Item or Product	**Inspection Required**	**Accept Criteria**	**Hold Witness**
Drawings & Specifications	Inspect controlled documents	Controlled copy of latest issue on site	Hold
Foundation & retained soil			
Density	Density meter *	As specified	Hold
Friction angle	Shear box *	As specified	Hold
Cohesion	Shear box *	As specified	Hold
Levelling pad			
Width	Spot check	+ 10%,- 2%	Hold
Depth	Spot check	+ 10%,- 2%	Hold
Density	Density meter *	As specified	Hold
Friction angle	Shear box *	As specified	Hold
Cohesion	Shear box *	As specified	Hold
Masonry units			
Type	Spot check	As specified	Hold
Dimensions	Spot check	As specified	Hold
Strength	Spot check dockets	As specified	Hold
Geogrids			
Type	Spot check markings	As specified	Hold
Strength grade	Spot check markings	As specified	Hold
Spacing	Spot check	As specified	Witness
Laps	Spot check	+,- 5%	Witness
Drainage system	Visual	As specified	Hold
Granular fill	Visual	As specified	Witness
Geotextile	Visual	As specified	Hold
Fill	Visual	As specified	Witness
Sealing and surface drains	Visual	Located to drawing	Witness
Notes All tolerances shall be as shown, except where overridden architectural or regulatory requirements. * The Engineer may relax this requirement if other satisfactory controls are in place.			

SPECIFICATION - REINFORCED MASONRY RETAINING WALLS

Scope
This section covers the construction of reinforced masonry retaining walls. It excludes reinforced soil structures, segmental gravity walls, cantilever post and whaler retaining walls and sheet-pile retaining walls.

Building Regulations and Standards

All materials and construction shall comply with the most recent version of:

- the relevant parts of the Building Regulations;
- the Standards referred to therein;
- other Standards nominated in this specification; and
- other relevant Regulations.

Relevant Standards
..AS 4678 Earth retaining structures
..AS 2758.1 Aggregates and rock for engineering purposes - Concrete aggregates
..AS 3600 Concrete Structures
..AS 3700 Masonry structures
..AS 3798 Guidelines on earthworks for commercial and residential developments
..AS/NZS 4671 Steel reinforcing materials
..AS 3972 Portland and blended cements
..AS 1672.1 Limes and limestone - Limes for building
..AS 4455 Masonry units and segmental pavers

Commencement

Work shall commence as soon as practical after, but not before,
(a) The Builder has issued:

- a written order
- the relevant contract drawings, specifications and schedule of work
- written approval of any details provided by the Contractor

(b) All adjacent earthworks are complete, profiles and benchmarks are established.

Earthworks and Drainage
The earthworks and drainage for all retaining walls shall comply with Specification:
"RETAINING WALLS – EARTHWORKS AND DRAINAGE"

Positioning Reinforcement
Starter bars shall be tied into position to provide the specified lap above the top surface of the footing. The starter bars shall be held in position by a timber hob form and controlled within a tolerance of +,- 5 mm through the wall and +,- 50 mm along the wall.

Bar chairs shall be placed at one metre centres both ways to give the following clear cover. Chair bases shall be used to prevent sinking of the chairs. Unless specified otherwise on the drawings, structural laps and cover shall be as follows.

Required Cover

- 40 mm in concrete in contact with unprotected ground
- 40 mm in concrete exposed externally
- 30 mm to a sealed vapour barrier
- 20 mm to the internal surface

Reinforcement	**Required Laps**
Bars	500 mm
Fabric	2 cross wires overlapping
Trench mesh	500 mm

Two N12 corner bars 1.0 metre long shall be placed at all re-entrant corners.

Placing Concrete
Trenches and footing excavations shall be dewatered and cleaned prior to concrete placement so that no softened or loosened material remains.

All concrete shall be compacted by mechanical immersion vibrator
Unless noted otherwise on the drawings, reinforced concrete footings for retaining walls shall include a level concrete hob (or up-stand), through which vertical starter bars are placed and on which the masonry is built. Horizontal 50 mm diameter weep holes shall pass through the hob at 1.2 m maximum centres. The top of the footing immediately behind the hob shall be sloped at 1 in 100 to provide for the drainage pipe.

Finishing Concrete
Concrete surfaces shall be finished as noted below unless specified otherwise in the Drawings.

- Floor slabs - Steel float
- External paths, driveways and parking areas at less than 10% slope - Fine broomed steel float
- External paths, driveways and parking areas at greater than 10% slope - Coarse broomed steel float
- Vertical surfaces exposed in the completed building – All voids filled and rubbed back to provide a smooth surface
- Vertical surfaces not exposed in the completed building - Off form finish.

Curing Concrete
All concrete shall be cured using a sprayed curing compound.
Wax-based compounds shall not be used in areas requiring the subsequent application of curing adhesives.

Stripping Formwork
Unless adverse weather or the use of retarders delays the hardening of concrete, the minimum stripping time for formwork shall be 3 days.

Drainage System
The drainage system shall comply with the Drawings, Building Regulations and relevant Standard (..AS 4678). Unless stated otherwise, the drainage system shall consist of:

- Horizontal 50 mm diameter weep holes passing through a hob (or the reinforced masonry stem if appropriate) at 1.2 m maximum centres.
- A permeable drainage layer not less than 300 mm wide adjacent to the stem of the wall.
- A 100 mm slotted PVC agricultural pipe
- For applications with high water table, 200 mm wide geocomposite strips at 2.0 m centres at the existing 1 : 1 batter, connected to the agricultural pipe drainage system.

Constructing Drainage Fill
Drainage fill shall be:

- Placed and compacted, by mechanical plate vibrator, to a minimum of 95% Standard Compaction
- Above and beside the drainage pipe with a minimum cover of 150 mm
- Behind the wall to a minimum width of 300 mm to within 300 mm of the top
- Protected by a geotextile envelope that completely isolates the drainage fill from the retained fill
- Adequately drained away from the retaining structures by the drainage system.

Constructing the Drainage System
The drainage pipe shall be positioned in the drainage fill at a minimum uniform grade of 1 in 100 over a length not exceeding 15 metres. It shall be connected to the storm-water system at the lower end of each run and shall drain positively away from base of the retaining wall. The drainage pipe shall be brought to the surface at the upper end of each run to facilitate future flushing, capped and its positioned marked.

Mortar
For general applications (except as listed for M4), Type M3 mortar shall be used, and shall consist by volume of:

1 part GP or GB cement, 1 part lime, 6 parts sand (water thickener optional)
1 part GP or GB cement, 5 parts sand plus water thickener
1 part masonry cement, 4 parts sand (See Note 1)

For the applications listed below, Type M4 mortar shall be used, and shall consist by volume of:

1 part GP or GB cement, 0.5 part lime, 4.5 parts sand (water thickener optional)
1 part GP or GB cement, 4 parts sand plus water thickener
1 part GP or GB cement, 0-0.25 parts lime, 3 parts sand (water thickener optional)
1 part masonry cement, 3 parts sand (See Note 1)

- Elements in interior environments subject to saline wetting and drying
- Elements below a damp-proof course or in contact with ground in aggressive soils
- Elements in severe marine environments
- Elements in saline or contaminated water including tidal splash zones
- Elements within 1 km of an industry producing chemical pollutants.

Constructing the Reinforced Masonry Stem
The first course of a reinforced masonry wall shall consist of clean-out blocks (with only one face shell) to permit the subsequent removal of debris and mortar fins. The opening of the clean-out blocks shall face the soil embankment, except where there is insufficient access.

The blocks shall be positioned to provide 55mm cover from the face of the bar to the rear face of the blockwork. (This will allow 35 mm for the face shells of upper courses and 20 mm of cover within the grout).

Provide drainage through the stem of the wall by;

- Horizontal 50 mm diameter weep holes at 1,200 mm maximum centres through a hob, or
- Horizontal 50 mm diameter weep holes at 1,200 mm maximum centres through the reinforced masonry stem.

Subsequent courses shall consist of H Block or Double U Block. Horizontal reinforcement placed centrally on the webs during the laying of the blockwork.

If blocks with webs flush with the ends are to be used, horizontal reinforcement shall be suspended above the webs on 15 mm mortar pack on the centre web only.

Mortar joints shall be 10 mm thick and shall be face shell bedded and ironed (unless a flush joint is specified for aesthetic reasons). Control joints shall be built into the masonry at joints in the footing, at significant changes in wall profile or at centres not exceeding 16 metres.

If the retaining consists of two leaves of cavity construction, suitable cavity ties shall be built in at centres such that the wet grout pressure does not cause spreading of the cavity. Ties shall incorporate 100 cogs at each end that shall bear snugly against the rebate in the blocks and shall be securely fixed by embedment in mortar. The following combinations are deemed to meet this requirement:

Maximum grout height	Tie	Maximum Spacing (Vertical x Horizontal)
2.0 metres	R6 (Grade 250)	400 mm x 400 mm

Where a retaining wall consists of a single leaf stem supported by a cavity stem, links shall be provided in the first joint below the junction of cavity stem and single leaf stem to prevent widening of the cavity. The following reinforcement is deemed to meet this requirement:

Maximum height	Shear reinforcement of single leaf stem
2.0 metres	SL62 Fab

Debris and mortar fins shall be removed by rodding and hosing out the cores.

Vertical steel reinforcement shall be positioned towards the rear of the cores to provide the cover noted above.
Vertical steel reinforcement shall be tied through clean-out openings with wire ties to the steel starter bars and fixed in position at the top of the wall by plastic clips before the placing of any grout.

When cleaning out and tying of steel are complete, the opening shall be blanked off with a timber form suitably propped to prevent movement. Alternatively blocks which incorporate purpose designed blanks may be used.

Concrete grout shall be placed in the cores either by pumping or, for small projects, by bucket. Grout shall be compacted so that there are no voids, using either a high frequency pencil vibrator or by rodding. (The main vertical bars shall not be moved to compact the grout.)

On completion of the grouting, capping blocks shall be installed (if required) and any control joints finished.

Constructing Bulk Fill Material
Bulk fill material shall be uniform and of maximum particle size of 100 mm.

Constructing Bulk Fill Material
Bulk filling material shall be placed and in layers not exceeding 200 mm at a moisture content within 2% of Optimum Moisture Content (OMC) to achieve 85% Standard Compaction.

At the end of each day's construction, the infill material shall be sloped such that any rainwater is directed away from the face of the retaining wall and to a temporary (or permanent) drainage system.

Constructing Surface Sealing Material And Catch Drain

Where required by the Engineer... The whole of the disturbed fill surface shall be sealed and drained by compacting a layer of surface sealing material at least 300 mm thick and in accordance with the relevant Standard (or AS 4768).

The drainage shall shed water away from the back fill and away from the toe of the retaining wall. This may be achieved by constructing a 100 mm deep catch drain to drain to the site drainage system at a minimum slope of 1 in 100.

Tolerances
Unless specified otherwise for reasons of aesthetics or by the client or architect, all construction shall be within the following tolerances:

Element	Vertical Position	Horizontal Position	Vertical Alignment	Horizontal Alignment
Soil surface	+,- 100 mm	-	-	-
Facings and wall structures	+,- 50 mm	+,- 50 mm	+,- 20 mm in 3 m	+,- 20 mm in 3 m
Footings and supports	+,- 50 mm	+,- 50 mm	+,- 20 mm in 3 m	+,- 20 mm in 3 m

Concrete

Concrete shall comply with the Drawings, Building Regulations and relevant Standard (..AS 2870). Unless stated otherwise, properties shall be not less than:

- Characteristic compressive strength of 20 MPa (Strength grade N20)
- Maximum aggregate size of 20 mm
- Of sufficient slump to facilitate the nominates means of placement
- Subject to plant control testing.

More details…click here

Reinforcement

Reinforcement shall comply with the Drawings, Building Regulations and relevant Standard (..AS 2870). Unless stated otherwise, properties shall be not less than:

- Deformed bars - 500 MPa, normal ductility (N)
- Square fabric, rectangular fabric and trench mesh - 500 MPa, low (L) or normal (N) ductility ribbed wires
- Fitments -500 MPa, low (L) or normal (N) ductility ribbed wires
- Round bar (eg R250 N10 for dowels) - 250 MPa round

More details…click here

Bar Chairs

Bar chairs shall comply with the Drawings, Building Regulations and relevant Standard. Unless stated otherwise, properties shall such that:

- Reinforcement is positioned in the top half of the concrete slab
- Reinforcement in footings has 40 mm in concrete in contact with unprotected ground and 30 mm to a sealed vapour barrier

More details…click here

Formwork

Formwork shall comply with the Drawings, Building Regulations and relevant Standard (..AS 3610).

More details…click here

Key Joint Form

Key joint forms shall comply with the Drawings, Building Regulations and relevant Standard (..AS 4678). Unless stated otherwise, key joint forms shall provide keys in 100, 150 or 200 mm slabs, and shall include all required wedges and pegs. Where a control joint is to be constructed with a flexible sealant, a polyethylene foam strip shall be inserted. Otherwise a PVC capping strip shall be inserted. Unless stated otherwise, the colour shall be grey.

More details…click here

Curing Compounds

Curing compounds shall comply with the Drawings, Building Regulations and relevant Standards. Unless stated otherwise, curing compounds shall be hydrocarbon, solvent-based acrylic, water-based acrylic or wax-based acrylic. Wax-based compounds shall not be used in areas requiring the subsequent application of curing adhesives.

More details…click here

Joint Material

Joint material shall comply with the Drawings, Building Regulations and relevant Standard (..AS 4678). Unless stated otherwise:

- Backing rod for control joints, expansion joints and articulation joints shall be expanded polystyrene tube or bead or, rigid steel backing profile with closed cell foam adhered to the metal profile face.
- Joint sealant shall be gun grade multi-purpose polyurethane sealant.

More details…click here

Expansion Joints for Continuous Pours

Expansion joints for continuous pours shall comply with the Drawings, Building Regulations and relevant Standard (..AS 4678). Unless stated otherwise, expansion joints in continuous pour applications shall provide a full depth straight joint and a purpose built dowelling system to provide positive load transfer across the finished slab.

More details…click here

Concrete Jointing Accessories

Concrete jointing accessories shall comply with the Drawings, Building Regulations and relevant Standard (..AS 4678). Unless stated otherwise, concrete jointing accessories shall have appropriate properties to ensure they fulfil their intended function and can be accurately installed.

- Dowel Cradles shall provide accurate horizontal and vertical alignment of dowels.
- Crack Inducers shall provide an adequate crack to relieve contraction stresses.
- Rebate Moulds shall be constructed of a rigid PVC material and form a true square or rectangular rebate.
- Dowel Sleeves shall include provision for longitudinal expansion in the ends of all sleeves, stiffening ribs to minimise distortion, end clips to ensure correct alignment during pour and end closures to prevent entering of slurry.
- Expansion Caps shall fit a variety of dowel sizes and provide internal compression pins for longitudinal expansion.
- Permanent Flexible Plastic Capping shall be UV treated PVC material and provide a bevelled edge to the joint.
- Removable Capping shall be PVC material and provide a bevelled edge to the joint.
- Foam Filler compression strips shall be closed cell polyethylene foam.
- Key Joint Joiners shall provide accurate alignment of key joints in both horizontal and vertical directions without interrupting the capping line.

More details…click here

Concrete Blocks for Reinforced Masonry Applications

Concrete blocks for reinforced masonry applications shall comply with the Drawings, Building Regulations and relevant Standard (..AS/NZS 4455.1). Unless stated otherwise, properties shall be not less than:

- Dimensional category DW4
- Salt attack resistance grade shall be:
  - General Purpose except as listed below for Exposure Grade
  - Exposure Grade where the masonry is:
    - subject to saline wetting and drying; or
    - in aggressive soils; or
    - in a severe marine environment; or
    - subject to saline or contaminated water, including tidal spash zones; or
    - in especially aggressive environments. e.g. subject to attack by corrosive liquids or gasses, or within 1 km of industry in which chemical pollutants are produced.
- Minimum characteristic compressive strength shall be as nominated by the engineer and not less than 15 MPa. The required strength depends on the the particular application. Refer to the manufacturer's design literature for guidance.
- Dimensions and core configuration shall be such that:
  - If units are intended to incorporate both horizontal and vertical reinforcement and are not protected both sides by a waterproof membrane, they shall be "H" or "Double U" configuration;
  - Units may be fully grouted and may be reinforced both vertically and horizontally;
  - Grout may flow easily around and enclose the reinforcement in all cores; and
  - Cover is consistent with the requirements for durability, strength and fire resistance as appropriate.
- Mean Coefficient of Residual Drying Contraction shall be not more than 0.6 mm/m.
- If intended for face applications and exposed to the weather:
  - Permeability shall be not more than 2 mm/minute
  - Efflorescence Potential shall be Nil or Slight
  - Colour and texture shall be within an agreed range.

More details…click here

Definitions

- Dimensional Category DW4 - For a sample of 20 units, the standard deviation of work sizes shall be not more than 2 mm, and the difference between the mean and the work size shall be not more than 3 mm. For split faces, the dimensional deviations shall not apply to the width of the unit, provided the average width is not less than 90% of the work size.
- General Purpose Salt Attack Resistance Grade - Performance such that it is possible to demonstrate that the product has a history of surviving under non-saline environmental conditions similar to those existing at the site considered, but not expected to meet the mass loss criterion for Exposure Grade Salt Attack Resistance Grade.
- Exposure Grade Salt Attack Resistance Grade - Performance such that it is possible to demonstrate that the product has a history of surviving under saline environmental conditions similar to those existing at the site considered; and less than 0.2 grams mass loss in 40 cycles in AS/NZS 4456.10, Method B test.

Concrete Blocks for Reinforced Mortarless Masonry Applications

Concrete blocks for reinforced mortarless masonry applications shall comply with the Drawings, Building Regulations and relevant Standard (..AS/NZS 4455.1). Unless stated otherwise, properties shall be not less than:

- Dimensional category DW4
- Salt attack resistance grade shall be:
  - General Purpose except as listed below for Exposure Grade
  - Exposure Grade where the masonry is:
    - subject to saline wetting and drying; or
    - in aggressive soils; or
    - in a severe marine environment; or
    - subject to saline or contaminated water, including tidal spash zones; or
    - in especially aggressive environments. e.g. subject to attack by corrosive liquids or gasses, or within 1 km of industry in which chemical pollutants are produced.
- Minimum characteristic compressive strength shall be as nominated by the engineer and not less than the value nominated in the drawings, and in no case less than 15 MPa.The required strength depends on the particular application. Refer to the manufacturer's design literature for guidance.
- Dimensions and core configuration shall be such that:
  - Units may be fully grouted and reinforced, both vertically and horizontally;
  - Grout may flow easily around and enclose the reinforcement in all cores; and
  - Cover is consistent with the requirements for durability, strength and fire resistance as appropriate.
- Mean Coefficient of Residual Drying Contraction shall be not more than 0.6 mm/m.
- If intended for face applications and exposed to the weather:
  - Permeability shall be not more than 2 mm/minute
  - Efflorescence Potential shall be Nil or Slight
  - Colour and texture shall be within an agreed range.

More details…click here

Definitions

- Dimensional Category DW4 - For a sample of 5 units, the standard deviation of work sizes shall be not more than 2 mm, and the difference between the mean and the work size shall be not more than 3 mm. For tightly interlocking surfaces of retaining wall units, tighter tolerances are applicable, such that when 5 units are stacked on top of each other on a flat surface, the slope of the top surface shall be not greater than 1 in 50. For split faces, the dimensional deviations shall not apply to the width of the unit, provided the average width is not less than 90% of the work size.
- General Purpose Salt Attack Resistance Grade - Performance such that it is possible to demonstrate that the product has a history of surviving under non-saline environmental conditions similar to those existing at the site considered, but not expected to meet the mass loss criterion for Exposure Grade Salt Attack Resistance Grade.
- Exposure Grade Salt Attack Resistance Grade - Performance such that it is possible to demonstrate that the product has a history of surviving under saline environmental conditions similar to those existing at the site considered; and less than 0.2 grams mass loss in 40 cycles in AS/NZS 4456.10, Method B test.

Cement

Cement shall be Type GP portland cement or GB blended cement complying with the relevant Standard.(..AS 3972).
More details…click here

Lime

Lime shall be hydrated building lime complying with complying with the relevant Standard (..AS 1672).
More details…click here

Water Thickener

Water thickener shall be methyl-cellulose based.
More details…click here

Sand

Sand shall be well graded and free from salts, vegetable matter and impurities. Sand shall not contain more than 10% of the material passing the 75 micron sieve. Sand within the following grading limits complies with this requirement and is deemed suitable for concrete masonry.

Sieve	Percent Passing
4.76 mm	100
2.36 mm	95–100
1.18 mm	60–100
600 µm	30–100
300 µm	10–50
150 µm	0–10
75 µm	0–4

More details…click here

Joint Material

Joint material shall comply with the Drawings, Building Regulations and relevant Standard (..AS 3700). Unless stated otherwise:

- Backing rod for control joints, expansion joints and articulation joints shall be expanded polystyrene tube or bead or, rigid steel backing profile with closed cell foam adhered to the metal profile face.
- Joint sealant shall be gun grade multi-purpose polyurethane sealant.
- Control joints and articulation joints shall incorporate de-bonding tape.

More details…click here

Concrete Grout

Concrete grout shall comply with the Drawings, Building Regulations and relevant Standard (..AS 3700). Unless stated otherwise, properties shall be:

- a minimum portland cement content of 300 kg/cubic metre;
- a maximum aggregate size of 10 mm;
- sufficient slump to completely fill the cores; and
- a minimum compressive cylinder strength of 20 MPa.

More details…click here

Surface Sealing Material

The material used to seal the surface of the fill shall be compacted clay.
Alternatively, a 0.2 mm thick PVC membrane or a needle-punched bentonite liner overlaid by at least 150 mm of bulk fill material may be used in lieu of the clay.
More details…click here

Bulk Fill Material

Bulk fill material shall be uniform and of maximum particle size of 100 mm.
More details…click here

Inspections and Tests

When work reaches a stage of requiring inspection, (e.g. footing reinforcement, geogrids and drainage) the Contractor shall advise the Engineer, before proceeding to cover, close or complete the work. The following inspections shall be performed.

Item or Product	**Inspection Required**	**Accept Criteria**	**Hold Witness**
Drawings & Specifications	Inspect controlled documents	Controlled copy of latest issue on site	Hold
Foundation & retained soil			
Density	Density meter *	As specified	Hold
Friction angle	Shear box *	As specified	Hold
Cohesion	Shear box *	As specified	Hold
Levelling pad			
Width	Spot check	+ 10%,- 2%	Hold
Depth	Spot check	+ 10%,- 2%	Hold
Density	Density meter *	As specified	Hold
Friction angle	Shear box *	As specified	Hold
Cohesion	Shear box *	As specified	Hold
Footing dimensions			
Width	Spot check	+ 10%,- 2%	Hold
Length	Spot check	+ 10%,- 2%	Hold
Reinforcement cover	Check chair size	As specified	Hold
Edge forms	Check all edges	+,- 20 mm	Hold
Level on soil	Spot check levels	+ 10 mm, -50 mm	Hold
Footing Reinforcement			
Reinforcement grade	Spot check markings	As specified	Hold
Reinforcement diameter	Spot check diameter	As specified	Hold
Reinforcement spacing	Spot check	+,- 10%	Hold
Reinforcement laps	Spot check	+,- 10%	Hold
Reinforcement ligature spacing	Spot check	+,- 10%	Hold
Concrete strength	Spot check dockets	As specified	Witness
Curing	Spot check	As specified	Witness
Masonry units			
Type	Spot check	As specified	Hold
Dimensions	Spot check	As specified	Witness
Strength	Spot check dockets	As specified	Witness
Mortar mix	Spot check	As specified	Witness
Weep holes	Spot check	As detailed	Hold
Cover	Spot check	As spec >15mm	Hold
Wall Reinforcement			

Reinforcement grade	Spot check markings	As specified	Hold
Reinforcement diameter	Spot check markings	As specified	Hold
Reinforcement spacing	Spot check	+,- 10%	Hold
Reinforcement laps	Spot check	+,- 10%	Hold
Concrete grout strength	Spot check dockets	As specified	Witness
Cleaning	Visual	As per test panel	Witness
Drainage system	Flush pipes	Positive 1 in 100	Hold
Granular fill	Visual	Grading	Hold
Geotextile	Visual	As specified	Hold
Fill	Visual	Grading	Witness
Sealing and surface drains	Visual	Located to drawing	Witness
Notes All tolerances shall be as shown, except where overridden by architectural or regulatory requirements. * The Engineer may relax this requirement if other satisfactory controls are in place.			

PART 3
External Design Considerations

Appendix 1
Worked Example - External Design Gravity Retaining Walls

- **Segmental Concrete Gravity Retaining Wall**
- **Segmental Concrete Reinforced Soils Retaining Wall**
- **Reinforced Concrete Masonry Cantilever Retaining Wall**

The following example demonstrates the method used by the Software, based on the recommendations of the Concrete Masonry Association of Australia, to design the following retaining walls in accordance with AS 4678.

- Segmental Concrete Gravity Retaining Wall
- Segmental Concrete Reinforced Soils Retaining Wall
- Reinforced Concrete Masonry Cantilever Retaining Wall

A Microsoft Excel workbook has been developed consistent with this methodology, and used to calculate the various data used in this report.

Design Brief

Geometric Data

Exposed height of retaining wall
H_1 = 3.000 m

Slope of retaining wall (measured from vertical)
ω = 1.43 ^{o} (1 in 40 from vertical)

Slope of retained soil close to retaining wall (measured from horizontal)
β_1 = 14.04 ^{o} (1 in 4 from horizontal)

Length of slope at wall
$L_{slope\ 1}$ = 3.000 m

Slope of retained soil at distance from retaining wall (measured from horizontal)
β_2 = 1.43 ^{o} (1 in 40 from horizontal)

Length of slope at distance from wall
$L_{slope\ 2}$ = 1.000 m

Location, Service and Environmental Conditions

Service life
Y_{serv} = 60 years

Ambient temperature at surface
T = 30 ^{o}C

Location is Sydney

Underlying soil is not more than 30 m of stiff hard clay

Wind load
q_w = 0.9 kPa Determined from AS/NZS 1170.2

Groundwater

Allow for partial inadequacy of drainage system during rapid drawdown of water in front of wall.

Height of water table in front of wall (from soil surface at toe)
$H_{w\ front}$ = 0.100 m

Height of water table behind wall (from soil surface at toe)
$H_{w\ rear}$ = 0.400 m

Supported Structures
Barrier is 140 mm reinforced concrete blockwork on 450 mm x 300 mm reinforced concrete footing

Height of barrier
$H_{barrier}$ = 1.800 m

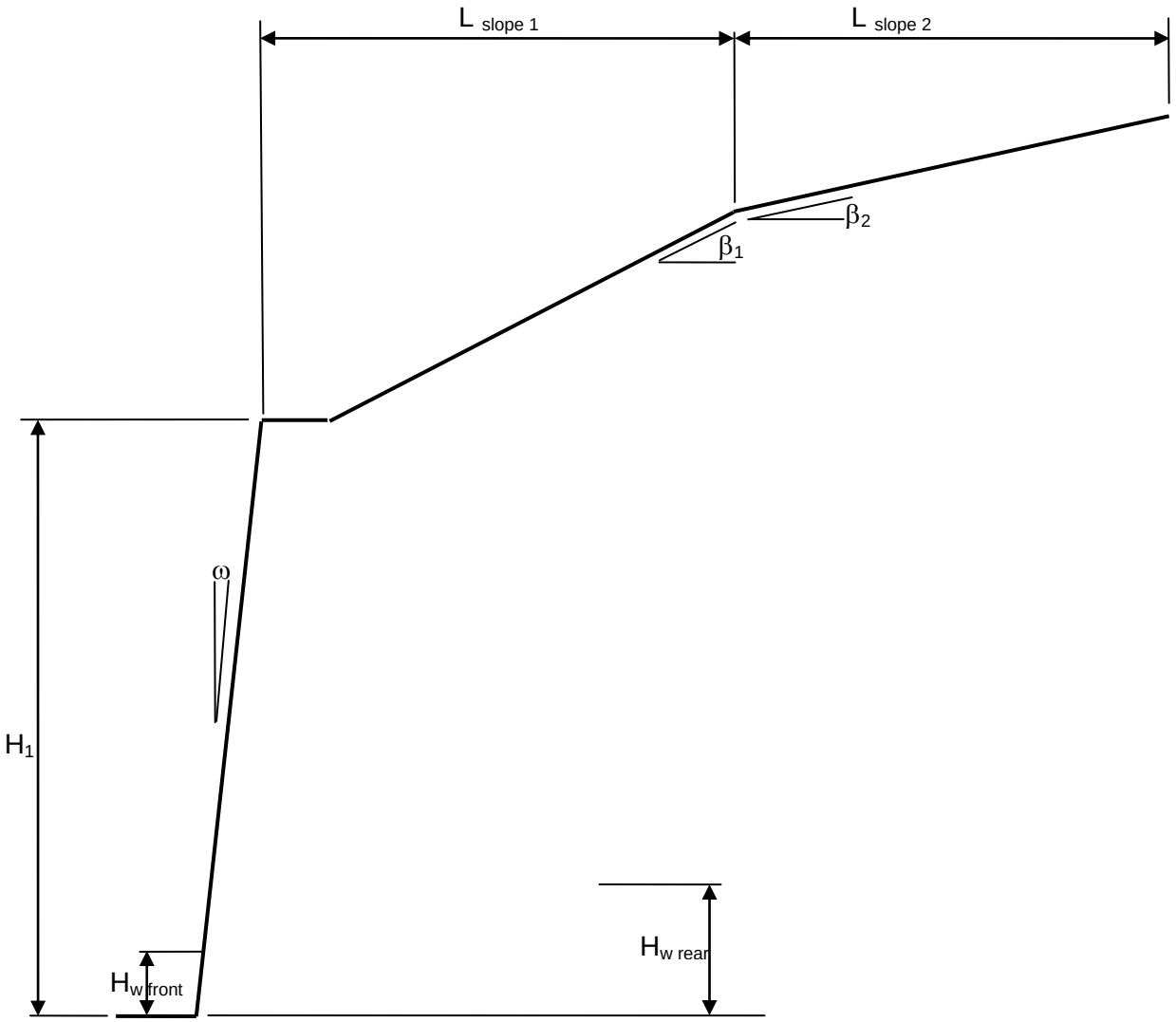

Loads

Dead load vertical surcharge

q_d = 2.5 kPa

Live load vertical surcharge

q_l = 5.0 kPa

Wind vertical surcharge

q_w = 0.1 kPa

Earthquake vertical surcharge

q_e = 0.1 kPa

Dead vertical line load

D_v = $H_{barrier}\ T_{barrier}\ \gamma_{barrier} + H_{footing}\ T_{footing}\ (\gamma_{footing} - \gamma_{soil})$

= (1.80 x 0.14 x 22) + (0.45 x 0.30) (24 – 20)

= 6.0 kN/m

Live vertical line load

L_v = 0.1 kN/m

Dead horizontal line load

D_H = 0.1 kN/m

Live horizontal line load

L_H = 0.1 kN/m

Wind horizontal line load

W_H = $q_w\ (H_{barrier} + H)$

= 0.9 (1.80 + 3.0)

= 4.3 kN/m

Earthquake horizontal line load

E_H = 0.6 kN/m

Position of Line Loads (Measured from ground level in front of embankment)

Height of horizontal line dead load

Y_{DH} = 3.900 m (At mid height of barrier)

Height of horizontal line live load

y_{EH} = 3.900 m (At mid height of barrier)

Height of horizontal line wind load

y_{WH} = 2.400 m (At mid-height of combined barrier and retaining wall)

Height of horizontal line earthquake load

y_{EH} = 3.900 m (At mid height of barrier)

Horizontal lever arm to vertical line dead load

x_{DV} = 0.400 m (Constructed behind the retaining wall facing)

Horizontal lever arm of vertical line live load

x_{LV} = 0.400 m (Constructed behind the retaining wall facing)

Retained Soil Properties
The retained soil is an Insitu Soil of one of the following types: Stiff sandy clays, gravelly clays, compact clayey sands and sandy silts, compact clay fill (Class 2)

Retained soil density
γ_r = 20 kN/m^3

Retained soil conservative estimate of the mean internal friction angle
φ_r = 30°

Retained soil conservative estimate of the mean cohesion
c_r = 5.0 kPa

Except in those cases of relatively low retaining walls where the Rankine-Bell method is used, cohesion of the retained soil will be assumed to be zero.

Foundation Soil Properties
The foundation soil is an Insitu Soil of one of the following types: Stiff sandy clays, gravelly clays, compact clayey sands and sandy silts, compact clay fill (Class 2)

Foundation soil density
γ_f = 20 kN/m^3

Foundation soil conservative estimate of the mean internal friction angle
φ_f = 30°

Foundation soil conservative estimate of the mean cohesion
c_f = 5.0 kPa

Designer must determine whether this value should be used.

Properties of Earth Retaining Structure
Gravity wall density
γ_i = 20.0 kN/m^3 (i.e. Facing and any confined soil)

In order to simplify the comparison of the three alternative retaining wall systems, an average density 20.0 kN/m^3 has been adopted in this worked example, for both the retaining wall facing and the infill material, including no-fines concrete.
More common values are:

- Dense concrete footings 24.0 kN/m^3
- Dense concrete masonry 22.0 kN/m^3
  This should be reduced to allow for voids in the facing that can not be filled.
- Compacted soil infill 20.0 kN/m^3
- No-fines concrete infill 18.0 kN/m^3

Infill soil density
γ_i = 20 kN/m^3
See note above.

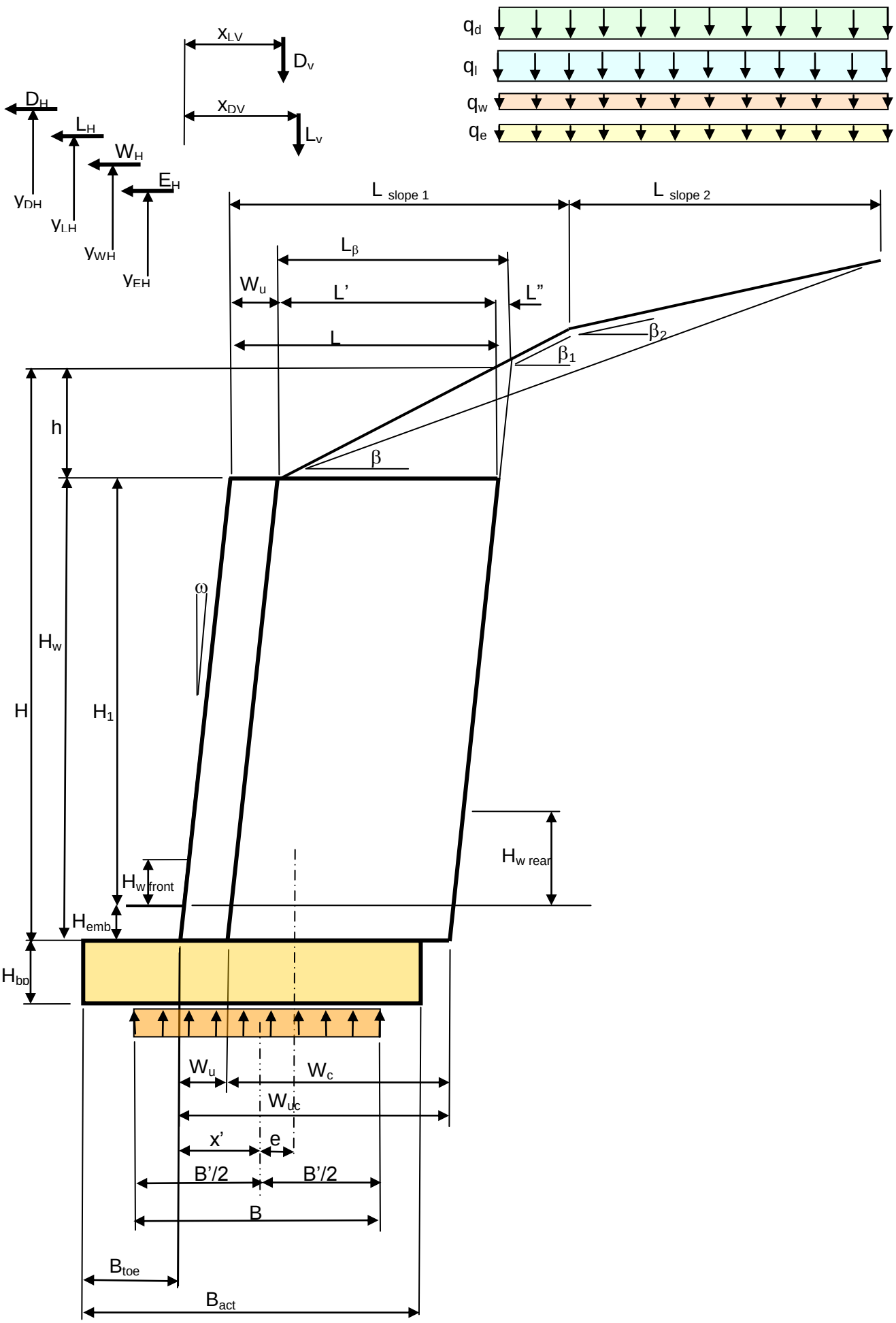
x_{LV}
D_v
x_{DV}
L_v
D_H
L_H
W_H
E_H
y_{DH}
y_{LH}
y_{WH}
y_{EH}
q_d
q_l
q_w
q_e
L slope 1
L slope 2
L_β
W_u
L'
L"
L
β_2
β_1
β
h
ω
H_w
H
H_1
$H_{w\ rear}$
$H_{w\ front}$
H_{emb}
H_{bp}
W_u
W_c
W_{uc}
x'
e
B'/2
B'/2
B
B_{toe}
B_{act}

Geometry of the Retaining Structure

System is a gravity wall, of one of the following types:

- Segmental Concrete Gravity Retaining Wall
- Segmental Concrete Reinforced Soil System
- Type 1 Reinforced Concrete Masonry Cantilever retaining Wall

Retaining Structure Dimensions

Total width of retaining structure (at the base)
Selected by trial and error based on approximately 0.7 times the exposed height

W_{uc} = $0.7(H_1 + H_{emb})$
= 0.7 x (3.000 + 0.200)
= 2.240 m

Width of infill behind facing at the base of the retaining structure

W_c = $W_{uc} - W_u$
= 2.240 -0.300
= 1.940 m

Length of infill behind facing at the base of the retaining structure

L' = 1.940 m
L' is commonly the same as W_c, (i.e. the depth into the embankment of the retaining structure is the same at the top as at the bottom). However, this is not necessarily always the case.

Width increase due to backfill slope

L" = $[L'. \tan(\beta_1).\tan(\omega)] / [1 – \tan(\beta_1).\tan(\omega)]$
= $[1.940 \times \tan(14.04^o) \tan(1.43^o)] / [1 – \tan(14.04^o) \tan(1.43^o)]$
= 0.012 m

Width at top of backfill slope

L_β = L' + L"
= 1.940 + 0.012
= 1.952 m

Height from top of wall to top of slope

h = $L_\beta \tan \beta_1$
= $1.952 \times \tan(14.04^o)$
= 0.488 m

Embedment (including footings [if applicable], but excluding bearing pad)

H_{emb} = 0.200 m

Height of wall (including embedment)

H = $H_1 + h + H_{emb}$
= 3.000 + 0.488 + 0.200
= 3.688 m

Effective slope of retained soil (measured from horizontal)

β = $\tan^{-1} [\{L_{slope\ 1} \tan(\beta_1) + L_{slope\ 2} \tan(\beta_2)\} / (L_{slope\ 1} + L_{slope\ 2})]$
= $\tan^{-1} [(\{3.0 \times \tan(14.04^o)\} + \{1.0 \times \tan(1.43^o)\}) / (3.0 + 1.0)]$
= 11.0^o

Angle of underside of base (measured from horizontal)

α = 0° Horizontal

Bearing Pad Dimensions
The actual width of the bearing pad should be selected to be just greater than that required by the analysis below.

Bearing pad thickness
H_{bp} = 270 mm

Factor for the spread of load through the bearing pad
The following assumptions are made to determine how effective the bearing pad is in spreading load down to the foundation.
K_{bp} = 2 for compacted road base
= 4 for cement stabilised compacted road base
= 8 for reinforced concrete

Actual width of bearing pad
B_{act} = 3.400 m

Depth of bearing pad
H_{bp} = 0.270 m

Maximum potential effective width of bearing pad
B = min [B_{act} , (W_{uc} + K_{bp} H_{bp})]
= min [3.400, (2.240 + 4 x 0.270)]
= 3.320 m

This is the width of bearing pad into which the vertical load (without lateral load) could be distributed, giving consideration to the particular material, its strength and stiffness.

Segmental Blocks

Segmental facing blocks are used in the following applications:

- Segmental concrete gravity walls (either with or without no-fines concrete backing to increase the mass)

- Segmental concrete reinforced soil retaining walls

  In this example, the following hypothetical 300 mm deep hollow unit has been selected. In order to simplify the comparison of the three alternative retaining wall systems, an average density 20.0 kN/m^3 has been adopted in this worked example, for both the retaining wall facing and the infill material, including no-fines concrete.
  A more common value for dense concrete masonry is 22.0 kN/m^3.

Default angle of layback
Ω = 1.43^o

Density of infill concrete
γ_{conc} = 2,040 kg/m^3

Density of fill within the unit
γ_{fill} = 2,040 kg/m^3

Proportion cores
P_{cores} = 60%

Proportion of cores filled
p_{cores} = 85%

Mass of one unit
M_u = 36.3 kg

Mass of fill within the unit
M_s = 18.7 kg

Height of one unit
H_u = 200 mm

Length of one unit
L_u = 450 mm

Width of one unit (depth into the embankment)
W_u = 300 mm

Spacing of units
S_u = 0 mm

Because the units have vertical cores that are filled with coarse fill, the base of the facing is considered to be “rough”.

Earthquake Considerations

Acceleration coefficient
a = 0.08

Site factor
S = 1.0

Local acceleration
aS = a . S
= 0.08 x 1.0
= 0.08

Earthquake design category
C_{eq} = B_{er}

There is no need to use increase factors or particular analysis for earthquake.

If a Mononobe-Okabe Pseudo-Static Analysis for earthquake loads were to be carried out, the following factors would be applicable. [1]

Nominal horizontal acceleration
a_h = 0.04 m/s

Nominal vertical acceleration
a_v = 0.00 m/s

Average amplified horizontal acceleration within the retained soil
a_{mh} = If (a_h < 0.45,(1.45- a_h) a_h , a_h)
= 0.056 m/s

Average amplified vertical acceleration within the retained soil
a_{mv} = If (a_v < 0.45,(1.45- a_v) a_v , a_v)
= 0.00 m/s

Horizontal seismic coefficient
k_h = 0.056

Vertical seismic coefficient
k_v = 0.0

Earthquake factors
θ_{eq} = Max [$\tan^{-1}(k_h /(1- k_v))$, $\tan^{-1}(k_h /(1+ k_v)$]
= Max [$\tan^{-1}(0.056 /(1- 0))$, $\tan^{-1}(0.056 /(1+ 0)$]
= 3.2^o

[1] The correct symbols for these terms is not clear in AS 4678, and requires clarification.

Ultimate load (limit state) calculations to AS 4678-2002

Partial Load Factors and Material Factors

This design is based on AS 4678. The following table sets out the load combinations that should be checked, together with the corresponding load and materials factors. In this worked example, only the Ultimate Case, U (i) has been checked.

Partial Load Factors and Material Factors

		Ultimate			Short Term Serviceability					Long term Serviceability
Load Case		U (i)	U (ii)	U (iii)	SS (i)	SS (ii)	SS (iii)	SS (iv)	SS (v)	LS (i)
Overturning (active) soil loads	G_{dos}	1.25	1.25	1.25	NA	NA	1.00	1.00	1.00	1.00
Overturning dead loads	G_{do}	1.25	1.25	1.25	NA	NA	1.00	1.00	1.00	1.00
Overturning live loads	G_{lo}	1.50	0.60	0.60	NA	NA	0.00	0.60	0.60	0.00
Overturning wind loads	G_{wo}	0.00	1.00	0.00	NA	NA	1.00	0.00	1.00	0.00
Overturning earthquake loads	G_{eo}	0.00	0.00	1.00	NA	NA	0.00	0.00	0.00	0.00
Resisting dead loads	G_{dr}	0.80	0.80	0.80	NA	NA	1.00	1.00	1.00	1.00
Resisting live loads (eg over infill material)	G_{lr}	0.00	0.00	0.00	NA	NA	0.00	0.00	0.00	0.00
Water in tension cracks and groundwater	G_v	1.00	1.00	1.00	NA	NA	1.00	1.00	1.00	1.00
Partial factors on tan(phi)	$\Phi_{\tan(\varphi)}$									
Class 1 controlled fill		0.95	0.95	0.95	NA	NA	1.00	1.00	1.00	1.00
Class 2 controlled fill		0.90	0.90	0.90	NA	NA	0.95	0.95	0.95	0.95
Uncontrolled fill		0.75	0.75	0.75	NA	NA	0.90	0.90	0.90	0.90
In-situ natural soil		0.85	0.85	0.85	NA	NA	1.00	1.00	1.00	1.00
Partial factors on cohesion	Φ_c									
Class 1 controlled fill		0.90	0.90	0.90	NA	NA	1.00	1.00	1.00	1.00
Class 2 controlled fill		0.75	0.75	0.75	NA	NA	0.85	0.85	0.85	0.85
Uncontrolled fill		0.50	0.50	0.50	NA	NA	0.65	0.65	0.65	0.65
In-situ natural soil		0.70	0.70	0.70	NA	NA	0.85	0.85	0.85	0.85
Structure classification factor	Φ_n	1.0	1.0	1.0	1.0	1.0	1.0	1.0	1.0	1.0

Soil Design Properties

Retained Soil

In this case, the retained soil is "in-situ" material. Any gap between the retaining structure and the retained soil should be filled with compacted infill-material. However, because failure planes may still form in the in-situ material, the design in this example will be based on the retained soil. Alternatively, the insitu material could be excavated and replaced to such a depth that any failure planes are forced to form in the infill material.

Retained soil partial factor on tan(φ)

$\Phi_{\tan(\varphi r)} = 0.85$

Retained soil partial factor on cohesion

$\Phi_{cr} = 0.70$

Retained soil design internal friction angle

$\varphi^*_r = \tan^{-1} [\Phi_{\tan(\varphi r)} . \tan(\varphi_r)]$

$= \tan^{-1} [0.85. \tan(30^o)]$

$= 26.1^o$

Retained soil design cohesion

$c^*_r = \Phi_{cr} . c_r$

$= 0.70 \times 5.0$

$= 3.5$ kPa

Except in those cases of relatively low retaining walls where the Rankine-Bell method is used, cohesion of the retained soil will be assumed to be zero.

Retained soil design external friction angle

$\delta^*_r = 0.667\ \varphi^*_r$

$= 0.667 \times 26.1$

$= 17.4^o$ against relatively smooth concrete

$= 1.0\ \varphi^*_r$

$= 1.0 \times 26.1^o$

$= 26.1^o$ against no-fines concrete

$= 1.0\ \varphi^*_r$

$= 1.0 \times 26.1^o$

$= 26.1^o$ against compacted infill soil

Allowance should be made for the effect of any geotextile or geocomposite that is incorporated into the structure.

Orientation of failure plane

$$\alpha_{ir} = \varphi^*_r + \tan^{-1} \left[\frac{\{ -\tan(\varphi^*_r - \beta) + \{\tan(\varphi^*_r - \beta) [\tan(\varphi^*_r - \beta) + \cot(\varphi^*_r + \omega)] . [1 + \tan(\delta^*_r - \omega) \cot(\varphi^*_r + \omega)]\}^{0.5}}{1 + \tan(\delta^*_r - \omega) . \tan(\varphi^*_r - \beta) + \cot(\varphi^*_r + \omega)} \right]$$

$= 47.5^o$

Active pressure coefficient,

$$K_a = \frac{\cos^2 (\varphi_r + \omega)}{\cos^2 \omega \cos(\omega - \delta)[1+ \{\sin(\varphi_r + \delta) \sin(\varphi_r - \beta) / \cos(\omega - \delta) \cos(\omega + \beta) \}^{0.5}\}^2}$$

$$= \frac{\cos^2 (26.1^o + 1.43^o)}{\cos^2(1.43^o) \cos(1.43^o-26.1^o)[1+ \{\sin(26.1^o+26.1^o) \sin(26.1^o-11.0^o) / \cos(1.43^o-26.1^o) \cos(1.43^o+11.0^o) \}^{0.5}\}^2}$$

$= 0.394$

Foundation Soil
In this case, the retained soil is “in-situ” material.

Any over-excavation should be filled with compacted cement-stabilised road base.

Foundation soil partial factor on tan(φ)
$\Phi_{\tan(\varphi f)} = 0.85$

Foundation soil partial factor on cohesion
$\Phi_{cf} = 0.70$

Foundation soil design internal friction angle
$\varphi^*_f = \tan^{-1} [\Phi_{\tan(\varphi f)}. \tan(\varphi_f)]$
$= \tan^{-1} [0.85. \tan(30^o)]$
$= 26.1^o$

Foundation soil design cohesion
$c^*_f = \Phi_{cf} . c_f$
$= 0.70 \times 5.0$
$= 3.5$ kPa

Foundation soil design external friction angle
$\delta_f = 0.667\ \varphi^*_f$
$= 0.667 \times 26.1$
$= 17.4^o$ against relatively smooth concrete

$= 1.0\ \varphi^*_f$
$= 1.0 \times 26.1^o$
$= 26.1^o$ against no-fines concrete

$= 1.0\ \varphi^*_f$
$= 1.0 \times 26.1^o$
$= 26.1^o$ against compacted infill soil

Allowance should be made for the effect of any geotextile or geocomposite that is incorporated into the structure.

Active pressure coefficient of foundation soil
$K_a = 0.394$

This is assumed to be the same as the active pressure coefficient for the retained soil, including:

- soil to rough surface or soil to soil
- consideration of lay-back
- consideration of slope of retained soil.

Passive pressure coefficient of foundation soil

$$K_p = \frac{1 + \sin(\varphi_f)}{1 - \sin(\varphi_f)}$$

$$= \frac{1 + \sin(26.1^o)}{1 - \sin(26.1^o)}$$

$= 2.58$

Infill Soil

Depending on the type of earth retaining structure and the profile of the existing embankment to be retained, it may be necessary to place infill soil between the embankment and the structure. In this case, the infill soil will be specified as one of the following: gravelly and compacted sand, controlled crushed sandstone and gravel fills (Class 1), dense well graded sands. The infill material will be compacted to Class C2.[2]

Infill soil density

γ_f = 20 kN/m^3

Infill soil conservative estimate of the mean internal friction angle

φ_f = 32°

Infill soil conservative estimate of the mean cohesion

c_f = 3.0 kPa

Infill soil partial factor on tan(φ)

$\Phi_{\tan(\varphi i)}$ = 0.90

Infill soil partial factor on cohesion

Φ_{ci} = 0.75

Infill soil design internal friction angle

$\varphi^*_i = \tan^{-1} [\Phi_{\tan(\varphi i)} . \tan(\varphi_i)]$

$= \tan^{-1} [0.90. \tan(32^o)]$

$= 29.4^o$

Infill soil design cohesion

$c^*_i = \Phi_{ci} . c_i$

= 0.75 x 3.0

= 2.3 kPa

A value of zero will be used in the design.

Infill soil design external friction angle

$\delta_i = 0.667\ \varphi^*_i$

= 0.667 x 29.4

= 19.6^o against relatively smooth concrete

$= 1.0\ \varphi^*_i$

= 1.0 x 29.4^o

= 29.4^o against no-fines concrete

$= 1.0\ \varphi^*_i$

= 1.0 x 29.4^o

= 29.4^o against compacted infill soil

Allowance should be made for the effect of any geotextile or geocomposite that is incorporated into the structure.

Orientation of failure plane

$$\alpha_{ii} = \varphi^*_i + \tan^{-1} \left[\frac{\{ -\tan(\varphi^*_i - \beta) + \{\tan(\varphi^*_i - \beta) [\tan(\varphi^*_i - \beta) + \cot(\varphi^*_i + \omega)] . [1 + \tan(\delta^*_i - \omega) \cot(\varphi^*_i + \omega)]\}^{0.5}}{1 + \tan(\delta^*_i - \omega) . \tan(\varphi^*_i - \beta) + \cot(\varphi^*_i + \omega)} \right]$$

$= 51.8^o$

[2] Refer to AS 4678 for definition of the compaction.

Bearing Pad
In this case, the bearing pad shall consist of compacted controlled fill, with 5% cement-stabilised crushed rock, WET when blocks laid, min strength

Specified compressive strength
f'_c = 5.0 MPa

Bearing pad density
γ_b = 20 kN/m^3

Bearing pad conservative estimate of the mean internal friction angle
φ_b = 40°

Bearing pad conservative estimate of the mean cohesion
c_b = 0.1 kPa

For a granular base, the cohesion is normally zero, and the adhesion is therefore also zero. In this example, a small nominal value of 0.1 kPa has been assumed for both adhesion and cohesion to demonstrate the method. In practice, it is common for a designer to ignore this value.

Bearing pad partial factor on tan(φ)
$\Phi_{\tan(\varphi b)}$ = 0.95

Bearing pad partial factor on cohesion
Φ_c = 0.90

Bearing pad design internal friction angle
φ^*_b = $\tan^{-1}[\Phi_{\tan(\varphi b)}.\ \tan(\varphi_b)]$
= $\tan^{-1}[0.95.\ \tan(40^o)]$
= 38.6^o

Bearing pad design external friction angle[3]
δ_b = 0.667 φ^*_b
= 0.667 x 38.6
= 25.7^o against relatively smooth concrete

= 1.0 φ^*_b
= 1.0 x 38.6^o
= 38.6^o against no-fines concrete

= 1.0 φ^*_f
= 1.0 x 26.1^o
= 26.1^o against compacted infill soil (Infill soil governs)

Bearing pad design cohesion
c^*_b = Φ_c c
= 0.90 x 0.1
= 0.09 kPa

[3] The values above are reasonably consistent with the NCMA approach, which uses the following:
Sliding resistance coefficient of levelling pad to other soil, $C_{ds\,b}$ = 1.0
Sliding resistance coefficient of levelling pad to smooth masonry, μ_b = 0.68

EXTERNAL STABILITY AT ULTIMATE LOADS AND RESISTANCES

Horizontal Forces

Horizontal active force due to surcharge

$P_{q\,H}$ $= K_{ar}\,[G_{do}\,q_d + G_{lo}\,q_q + G_{wo}\;q_{wo} + G_{eo}\,q_{eo})\;H\cos(\delta^*_r - \omega)$

$= 0.394\,[(1.25 \times 2.5) + (1.5 \times 5.0) + (0 \times 0.1) + (0 \times 0.1)]\;3.688 \times \cos(26.1^o - 1.43^o)$

$= 14.0$ kN/m

Horizontal active force due to soil

$P_{s\,H}$ $= K_{ar}\;0.5\,(G_{do}\,\gamma^*_r)\;H_1^2\cos(\delta^*_r - \omega)$

$= 0.394 \times 0.5\,(1.25 \times 20.0)\;3.688^2 \times \cos(26.1^o - 1.43^o)$

$= 60.8$ kN/m

Horizontal force due to water in front of wall

$P_{w\,front}$ $= -\,0.5\,\gamma^*_w\,(H_{w\,front} + H_{emb})^2$

$= -\,[0.5 \times 9.81 \times (0.100 + 0.200)^2]$

$= -0.44$ kN/m

Horizontal force due to water behind infill

$P_{w\,rear}$ $= 0.5\,\gamma^*_w\,(H_{w\,rear} + H_{emb})^2$

$= 0.5 \times 9.81 \times (0.400 + 0.200)^2$

$= 1.77$ kN/m

Horizontal force due to dead line load

$P_{D\,H}$ $= G_{do}\,D_H$

$= 1.25 \times 0.1$

$= 0.13$ kN/m

Horizontal force due to live line load at top

$P_{L\,H}$ $= G_{lo}\,L_H$

$= 1.\ 5 \times 0.1$

$= 0.15$ kN/m

Horizontal force due to wind line load at top

$P_{W\,H}$ $= G_{wo}\,W_H$

$= 0 \times 4.3$

$= 0.0$ kN/m

Horizontal force due to earthquake line load at top

$P_{E\,H}$ $= G_{eo}\,E_H$

$= 0 \times 0.6$

$= 0.0$ kN/m

Horizontal active force due to water in tension cracks

$P_{wc\,H}$ $= 0.0$ kN/m

This force will only apply in some cases of cohesive soil (when using Rankine-Bell method), where the fill is not protected against ingress of water.

Total horizontal forces causing forward movement
(at the interface between the retaining structure and bearing pad)

P_{bH} $= P_{q\,H} + P_{s\,H} + P_{w\,front} + P_{w\,rear} + P_{D\,H} + P_{L\,H} + P_{W\,H} + P_{E\,H} + P_{wc\,H}$

$= 14.0 + 60.8 - 0.44 + 1.77 + 0.13 + 0.15 + 0.0 + 0.0 + 0.0$

$= 76.4$ kN/m

Horizontal active force due to surcharge on bearing pad

P_{bpqH} = K_{ar} [G_{do} q_d + G_{lo} q_d + G_{wo} q_{wo} + G_{eo} q_{eo}) H_{bp} cos (δ^*_r)
= 0.394 [(1.25 x 2.5) + (1.5 x 5.0) + (0 x 0.1) + (0 x 0.1)] 0.270 x cos (26.1^o)
= 1.0 kN/m

The same active pressure coefficient as is applicable for the upper part of the retaining structure, K_{ar}, has been used. This is based on:

- The <u>internal</u> friction angle for retained soil (acting against bearing pad granular material)
- The layback of the upper structure, ω. (Slightly non-conservative assumption)

Horizontal active force due to soil on bearing pad

P_{bpsH} = K_{ar} (G_{dos} γ_b) 0.5 [H + (H +H_{bp})] H_{bp} cos (δ^*_r)
= 0.394 x 1.25 x 20.0 x 0.5 x [3.688 + (3.688 + 0.270)] x 0.270 x cos (26.1^o)
= 9.1 kN/m

The average pressure, acting on the thickness of bearing pad, H_{bp}, is at a depth of 0.5 [H + (H + H_{bp})]

The same active pressure coefficient as is applicable for the upper part of the retaining structure, K_{ar}, has been used. See comment above.

Total horizontal forces causing forward movement
(at the interface between the bearing pad and foundation)

P_{bH} = $P_{b\,H}$ + P_{bpqH} + P_{bpsH}
= 76.4 + 1.0 + 9.1
= 86.5 kN/m

Vertical Forces

Vertical weight of the gravity structure

$P_{f\,V}$ = G_{dr} γ_{su} W_{uc} H_w
= 0.8 x 20.0 x 2.240 x 3.200
= 114.7 kN/m

Vertical load due to sloping soil above the structure

$P_{f\,slopeV}$ = G_{dr} γ_{su} 0.5 (W_{uc} – W_u) h
= 0.8 x 20 x 0.5 x (2.240 – 0.300) x 0.488
= 7.58 kN/m

Vertical friction component of active surcharge load acting on the retained soil behind the structure

$P_{q\,V}$ = K_{ar} [G_{do} q_d + G_{lo} q_d + G_{wo} q_{wo} + G_{eo} q_{eo}) H_1 sin (δ^*_r – ω)
= 0.394 [(1.25 x 2.5) + (1.5 x 5.0) + (0 x 0.1) + (0 x 0.1)] 3.688 x sin (26.1^o – 1.43^o)
= 6.45 kN/m

Vertical friction component of active soil load behind the structure

$P_{s\,V}$ = K_{ar} 0.5 (G_{do} γ^*_r) H_1^2 sin (δ^*_r – ω)
= 0.394 x 0.5 (1.25 x 20.0) 3.688^2 x sin (26.1^o – 1.43^o)
= 28.0 kN/m

Vertical line dead load (on wall stem & no-fines concrete)

P_{Dv} = G_{dr} D_v
= 0.8 X 6.0
= 4.80 kN/m

Vertical line live load (on wall stem & no-fines concrete)

P_{Lv} = G_{lr} L_v
= 0.0 X 0.1
= 0.00 kN/m

Vertical uplift force of ground-water displaced by the retaining structure

$P_{w\,V}$ = $-\gamma^*_w \{0.5\,(H_{w\,front} + H_{w\,rear}) + H_{emb}\}\ W_{uc}$
= -9.81 x {0.5 x (0.100 + 0.400) + 0.200} x 2.240
= -9.89 kN/m

It is assumed that the water table varies linearly from the rear of the retaining structure to the front

Total vertical force at the interface of the retaining structure and bearing pad

P_V = $P_{f\,V} + P_{f\,slope\,V} + P_{q\,V} + P_{s\,V} + P_{Dv} + P_{Lv} + P_{w\,V}$
= 114.7 + 7.58 + 6.45 + 28.0 + 4.80 + 0.00 – 9.89
= 151.6 kN/m

Weight of bearing pad

P_{bpV} = $G_{dr}\ \gamma^*_b\ H_{bp}\ B$
= 0.80 x 20.0 x 0.270 x 3.320
= 14.3 kN/m

- The weight of the bearing pad has been calculated using the effective width of the bearing pad, B, with includes allowance for the spread of load from the underside of the retaining structure, down through the bearing pad.
- The effective width of the bearing pad, B, can not exceed the actual width of the bearing pad, B_{act}.
- Weights and reactions outside the extent of the effective width of the bearing pad, B, are considered to balance each other and are disregarded in the calculations.
- Provided that the effective width of the bearing pad, B, does not extend behind the rear of the structure, the assumptions above will be valid.

Vertical uplift force of ground-water displaced by the bearing pad

$P_{bp\ w\,V}$ = $-\gamma^*_w\ H_{bp}\ B$
= -9.81 x 0.270 x 3.320
= -8.8 kN/m

It is assumed that:

- The water table varies linearly from the rear of the retaining structure to the front
- The volume of water is that which is displaced by the part of the bearing pad which participates in supporting the loads of the structure.
  i.e. depth of bearing pad submerged x effective width under bearing pad, B

Vertical friction component of active surcharge force acting on the bearing pad

$P_{bp\,qV}$ = $K_{ar}\ [G_{do}\,q_d + G_{lo}\,q_d + G_{wo}\ q_{wo} + G_{eo}\ q_{eo})\ H_{bp}\ \sin(\delta^*_r)$
= 0.394 [(1.25 x 2.5) + (1.5 x 5.0) + (0 x 0.1) + (0 x 0.1)] 0.27 x sin (26.1^o)
= 0.5 kN/m

Vertical friction component of active soil load acting on the bearing pad

$P_{bp\ sV}$ = 0.5 K_{ar} (G_{dos} γ_b) (2 H + H_{bp}) H_{bp} sin (δ^*_r)
= 0.5 x 0.394 x 1.25 x 20.0 x [(2 x 3.688) + 0.270) x 0.270 x sin (26.1^o)
= 4.5 kN/m

Total vertical forces at the interface between the bearing pad and foundation

P_{bV} = P_V + P_{bpV} + $P_{bp\ w\ V}$ + $P_{bp\ qV}$ + $P_{bp\ sV}$
= 151.6 + 14.3 - 8.8 + 0.5 + 4.5
= 162.1 kN/m

Vertical Lever Arms

Vertical lever arm of horizontal surcharge load above toe

y_{qh} = 0.5 H_1
= 0.5 x 3.688
= 1.844 m

Vertical lever arm of horizontal soil load above toe

y_{qh} = 0.333 H_1
= 0.333 x 3.688
= 1.229 m

Vertical lever arm of horizontal force due to water in front of wall

y_{wf} = 0.333 ($H_{w\ front}$ + H_{emb})
= 0.333 x (0.100 + 0.200)
= 0.100 m

Vertical lever arm of horizontal force due to water behind infill

y_{wb} = 0.333 ($H_{w\ rear}$ + H_{emb})
= 0.333 x (0.400 + 0.200)
= 0.200 m

Vertical lever arm of dead line loads above toe

y_{Dh} = 3.900 + 0.200
= 4.100 m

Vertical lever arm of live line loads above toe

y_{Lh} = 3.900 + 0.200
= 4.100 m

Vertical lever arm of wind line loads above toe

y_{Wh} = 0.5 (H_1 + $H_{barrier}$) + H_{emb}
= 0.5 x (3.000 + 1.800) + 0.200
= 2.600 m

Vertical lever arm of earthquake line loads above toe

y_{Eh} = 3.900 + 0.200
= 4.100 m

Vertical lever arm on passive pressure in front of embedment

y_p = 0.333 H_{emb}
= 0.333 x 0.200
= 0.067 m

Depth of tension cracks in fissured cohesive soil
The following approach is applicable to the application of water in tension cracks in cohesive soils.
H_c = 2 c' / (g K_{ar} 0.5) - (G_{do} q_d + G_{lo} q_l) / (G_{do} g)
= 0 m

Vertical lever arm of horizontal water in tension cracks
y_{qh} = H_1 – 0.667 H_c
= 0 m

Horizontal Lever Arms
Horizontal lever arms may be calculated from any point, and the toe is commonly selected as the reference point. A check of overturning about the centroid of reaction will be carried out later, but at this stage in the calculations, the eccentricity is unknown.

Horizontal lever arm for retaining system (block + no-fines concrete)
x_{fv} = 0.5 (W_u + B) + 0.5 (H_1 + H_{emb}) tan ω
= [0.5 x (0.300 + 1.940)] + [0.5 x (3.000 + 0.200) tan (1.43^o)]
= 1.160 m

Horizontal lever arm of sloping soil
$x_{f\ slope\ v}$ = W_u + 0.667 L' + (H_1 + H_{emb} + 0.5 h) tan ω
= 0.3 + (0.667 x 1.940) + [(3.000 + 0.200 + {0.5 x 0.488}) tan (1.43^o)]
= 1.679 m

Horizontal lever arm for vertical surcharge load
x_{qv} = W_u + B + 0.5 H tan ω
= 0.300 + 1.940 + [0.5 x 3.688 x tan (1.43^o)]
= 2.286 m

Horizontal lever arm for vertical soil load
x_{sv} = W_u + B + 0.333 H tan ω – x'
= 0.300 + 1.940 + [0.333 x 3.688 x tan (1.43^o)]
= 2.271 m

Horizontal lever arm to vertical line dead load
x_{DV} = 0.400 m
Nominated in design brief

Horizontal lever arm of vertical line live load
x_{LV} = 0.400 m
Nominated in design brief

Horizontal lever arm from toe for water uplift
$x_{fv\ wu}$ = 0.5 W_{uc}
= 0.5 x 2.240
= 1.120 m

Sliding Resistance of Structure on Bearing Pad

Friction resistance of structure on bearing pad

P_{bf} = $P_v \tan(\varphi^*_b)\ \Phi_n$
= 151.6 x tan(38.6) x 1.0
= 120.8KN/m

The vertical load, P_v, is the sum of vertical loads that have already been factored by the relevant load factor for resisting loads, G_{drs}

In this example, it is assumed that the interface between the retaining structure (granular soil fill in hollow concrete facing units plus either compacted infill soil of no-fines concrete) is rough. Therefore the appropriate external friction angle is the minimum of the internal friction angles of the structure and the bearing pad.

If the retaining structure surface had been substantially smooth concrete, the appropriate external friction angle would be some lesser value, approximately two thirds of the internal friction angle.

Base adhesion of structure on bearing pad

P_{ba} = $(G_{drs}\ c^*_{bv}\ W_{uc}\ \Phi_n$
= (0.80 x 0.09) x 2.24 x 1.0
= 0.16 KN/m

The adhesion of a retaining structure on a bearing pad is the minimum of the adhesion (stickiness) of the interface and the cohesion of the bearing pad material. For a granular base, the cohesion is normally zero, and the adhesion is therefore also zero. For a cement stabilized material where the units are laid before the cement has hydrated, there may be some small value of adhesion. In this example, a small nominal value has been assumed to demonstrate the method. In practice, it is common for a designer to ignore this value.

The components of base adhesion have <u>not</u> already been factored by the relevant load factor for resisting loads, G_{drs} , which should be included in this formula.

Resisting passive earth pressure on structure

P_{bp} = $0.5\ K_{pb}\ (G_{drs}\ \gamma_b)\ H_{emb}^2\ \Phi_n$
= $0.5 \times 2.58 \times 0.80 \times 20.0 \times 0.200^2 \times 1.0$
= 0.82 KN/m

It is the designer's choice of whether or not to use passive resistance, giving consideration to issues of disturbance, erosion and poor compaction of the material in front of the structure. It is common practice to ignore passive resistance.

The components of passive resistance have <u>not</u> already been factored by the relevant load factor for resisting loads, G_{drs} , which should be included in this formula.

Total sliding resistance of facing on bearing pad

R_b = $P_{bf} + P_{ba} + P_{bp}$
= 120.8 + 0.16 + 0.82
= 121.8 kN/m
> P_{bH} = 76.4 kN/m OK

Factor against sliding = R_{sd} / P_H
= 121.8 / 76.4
= 1.59

Sliding Resistance of Bearing Pad on Foundation

Friction resistance of bearing pad on foundation

P_{ff} = P_{fv} tan(φ^*_b) Φ_n
= 162.1 x tan(26.1^o) x 1.0
= 79.6 KN/m

The appropriate external friction angle is the lesser of the values for the bearing pad and the foundation.

Base adhesion of structure on bearing pad

P_{fa} = (G_{drs} c^*_{bv} W_{uc} Φ_n
= (0.80 x 3.5) x 2.24 x 1.0
= 6.27 KN/m

The adhesion of a bearing pad on the foundation approximates the cohesion of the foundation. In this example, a small nominal value has been assumed to demonstrate the method. In practice, it is common for a designer to ignore this value.

The components of foundation adhesion have <u>not</u> already been factored by the relevant load factor for resisting loads, G_{drs} , which should be included in this formula.

Resisting passive earth pressure on structure

P_{fp} = 0.5 K_{pb} (G_{drs} γ_b) (H_{emb} + H_{bp})^2 Φ_n
= 0.5 x 2.58 x 0.80 x 20.0 x (0.200 + 0.270)^2 1.0
= 4.55 KN/m

It is the designer's choice of whether or not to use passive resistance, giving consideration to issues of disturbance, erosion and poor compaction of the material in front of the structure. It is common practice to ignore passive resistance.

The components of passive resistance have <u>not</u> already been factored by the relevant load factor for resisting loads, G_{drs} , which should be included in this formula.

Total sliding resistance of facing on bearing pad

R_f = P_{fH} + P_{adH} + P_{pH}
= 79.6 + 6.27 + 4.55
= 90.4 kN/m
> P_{fH} = 86.6 kN/m OK

Factor against sliding = R_f / P_{fH}
= 90.4 / 86.5
= 1.04

Eccentricity of Reaction

Take moments about the toe

Overturning moment about the toe

M_o = $P_{q\,H}$ y_{qh} + $P_{s\,H}$ y_{qh} + $P_{w\,front}$ y_{wf} + $P_{w\,rear}$ y_{wb} + $P_{D\,H}$ y_{Dh} + $P_{L\,H}$ y_{Lh} + $P_{W\,H}$ y_{Wh} + $P_{E\,H}$ y_{Eh} + $P_{w\,H}$ y_{qh}
= (14.0 x 1.844) + (60.8 x 1.229) + (-0.44 x 0.100) + (1.77 x 0.200) + (0.13 x 4.100)
+ (0.15 x 4.100) + (0.0 x 2.600) + (0.0 x 4.100) + (0.00 x 0.0)
= 102.0 kN.m/m

Restoring moment about the toe

M_r = $P_{f\,V}\,x_{fv} + P_{f\,slope\,V}\,x_{f\,slope\,v} + P_{q\,V}\,x_{qv} + P_{s\,V}\,x_{sv} + P_{Dv}\,x_{DV} + P_{Lv}\,x_{LV} + P_{w\,V}\,x_{fv\ wu}$

= (114.7 x 1.160) + (7.58 x 1.679) + (6.45 x 2.286) + (28.0 x 2.271) + (4.80 x 0.400) + (0.00 x 0.400) + (-9.89 x 1.120)

= 214.9 kNm/m

Eccentricity of reaction (measured from toe)

x' = $(M_r – M_o)$ / P_v

= (214.9 – 102.0) / 151.6

= 0.745 m

Eccentricity of reaction (measured from centreline)

e = 0.5 W_{uc} – x'

= (0.5 x 2.240) – 0.745

= 0.375 m

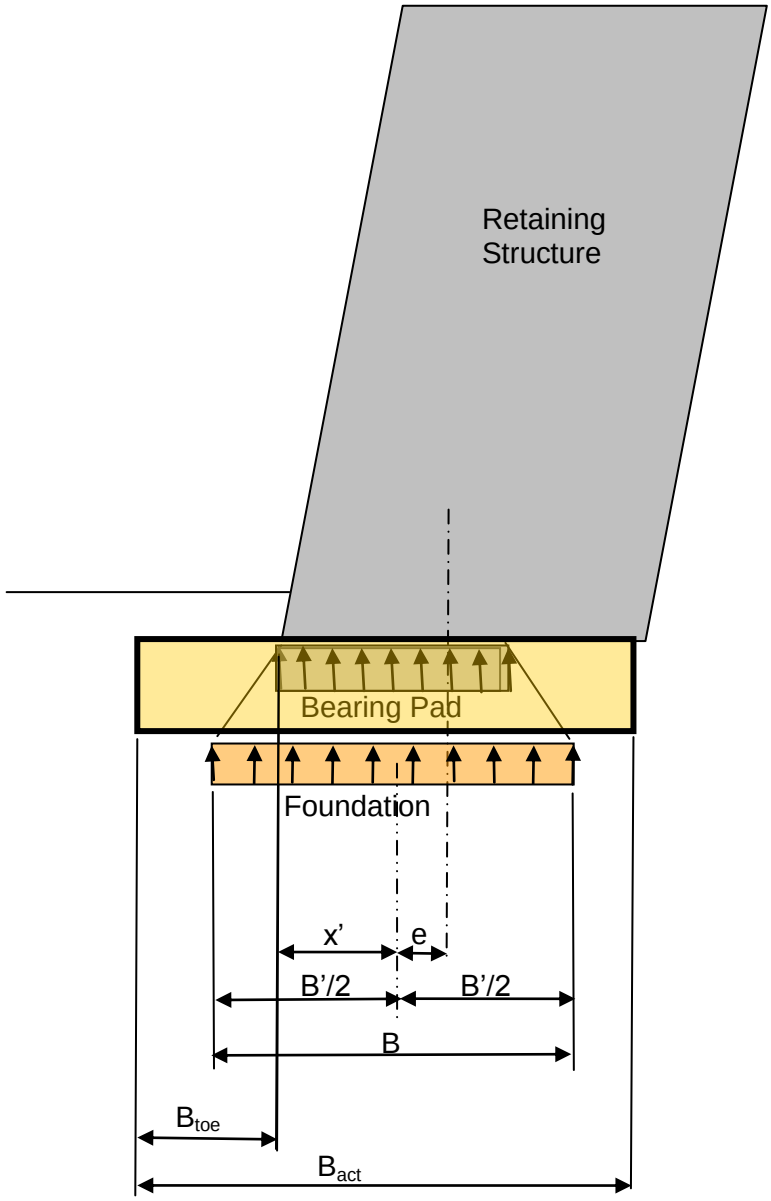

Bearing Capacity at the Interface Between the Bearing Pad and the Foundation

The bearing capacity at the interface between the bearing pad and the foundation is determined by Terzagghi analysis, modified by Vesic factors inclined load etc.

Effective width of bearing pad

B' $= B - 2e$
$= 3.320 - (2 \times 0.375)$
$= 2.570$ m

This is the width of bearing pad into which the vertical load is distributed, giving consideration to the effect of the lateral load and the particular material, its strength and stiffness.

N_q $= e^{\pi \tan \phi^{*f}} \tan^2 [\pi/4 + \phi^*_f/2]$
$= e^{3.14 \tan (26.1)} \tan^2 [(3.14/4) + (26.1^o/2)]$
$= 12.0$

N_c $= (N_q - 1) \cot \phi^*_f$
$= (12.0 - 1) \cot (26.1^o)$
$= 22.5$

N_γ $= 2 (N_q + 1) \tan \phi^*_f$
$= 2 (12.0 + 1) \tan (26.1^o)$
$= 12.8$

Shape factors

ξ_c $= 1.0$
ξ_q $= 1.0$
ξ_γ $= 1.0$

Factors for inclined load

ξ_{qi} $= [1 - P_H / (P_v + B' c^*_f \cot \phi^*_f)]^2$
$= [1 - 86.5 / \{171.3 + 2.570 \times 3.5 \times \cot (26.1^o)\}]^2$
$= 0.271$

ξ_{ci} $= \xi_{qi} - (1 - \xi_{qi}) / (N_c \tan \phi^*_f)$
$= 0.295 - [(1 - 0.295) / (22.5 \times \tan (26.1^o)]$
$= 0.205$

$\xi_{\gamma i}$ $= [1 - P_H / (P_v + B' c \cot \phi^*_f)]^3$
$= [1 - 86.5 / (171.3 + 2.570 \times 3.5 \times \cot (26.1^o))]^3$
$= 0.141$

Factors for sloping bases

ξ_{qt} $= (1 - \alpha \tan \phi^*_f)^2$
$= 1.0$ for level base

ξ_{ct} $= \xi_{qt} - (1 - \xi_{qt}) / (N_c \tan \phi^*_f)$
$= 1.0$ for level base

$\xi_{\gamma t}$ $= (1 - \alpha \tan \phi^*_f)^2$
$= 1.0$ for level base

Average bearing capacity based on factored soil properties

q_{av} = $c\ N_c\ \xi_c\ \ \xi_{ci}\ \ \xi_{ct} + \gamma\ (H_{emb} + H_{bp})\ N_q\ \xi_q\ \xi_{qi}\ \xi_{qt} + 0.5\ \gamma\ B\ N_\gamma\ \ \xi_\gamma\ \xi_{\gamma i}\ \xi_{\gamma t}$

= (3.5 x 22.5 x 1.0 x 0.205 x 1.0) + (20.0 x [0.200 + 0.270) x 12.0 x 1.0 x 0.271 x 1.0) + (0.5 x 20.0 x 3.320 x 12.8 x 1.0 x 0.141 x 1.0)

= 106.6 kPa

Bearing capacity of the foundation

$P_{v\ cap}$ = q_{av} B'

= 106.6 x 2.570

= 273.9 kN

> 162.1 kN OK

Factor of Safety against bearing failure

$F_{bearing} = P_{v\ cap} / P_v$

= 273.9 / 162.1

= 1.69

Check of Overturning About the Centroid of Reaction

Lever arms are measured from the centroid of reaction, by subtracting x' from the lever arms calculated from the toe.

Horizontal lever arm for retaining system (block + no-fines concrete)

x'_{fv} = $0.5\ (W_u + B) + 0.5\ (H_1 + H_{emb})\ \tan\omega - x'$

= [0.5 x (0.300 + 1.940)] + [0.5 x (3.000 + 0.200) tan (1.43°)] – 0.745

= 0.415 m

Horizontal lever arm of sloping soil

$x'_{f\ slope\ v} = W_u + 0.667\ L' + (H_1 + H_{emb} + 0.5\ h)\ \tan\omega - x'$

= 0.3 + (0.667 x 1.940) + [(3.000 + 0.200 + {0.5 x 0.488}) tan (1.43°)] – 0.745

= 0.935 m

Horizontal lever arm for vertical surcharge load

x'_{qv} = $W_u + B + 0.5\ H\ \tan\omega - x'$

= 0.300 + 1.940 + [0.5 x 3.688 x tan (1.43°)] – 0.745

= 1.541 m

Horizontal lever arm for vertical soil load

x'_{sv} = $W_u + B + 0.333\ H\ \tan\omega - x'$

= 0.300 + 1.940 + [0.333 x 3.688 x tan (1.43°)] – 0.745

= 1.526 m

Horizontal lever arm to vertical line dead load

x'_{DV} = $x_{DV} - x'$

= 0.400 – 0.745

= -0.345 m

Horizontal lever arm of vertical line live load

x'_{LV} = x_{LV} — x'

= 0.400 – 0.745

= -0345 m

Horizontal lever arm from toe for water uplift

$x'_{fv\ wu}$ = $0.5\ W_{uc} - x'$

= (0.5 x 2.24) -0.745

= 0.375 m

Take moments about intersection of centre line of reaction and underside of base at the bearing pad

Overturning moment about intersection of centre line of reaction and underside of base at the bearing pad

$M'_o = P_{q\,H}\,y_{qh} + P_{s\,H}\,y_{qh} + P_{w\,front}\,y_{wf} + P_{w\,rear}\,y_{wb} + P_{D\,H}\,y_{Dh} + P_{L\,H}\,y_{Lh} + P_{W\,H}\,y_{Wh} + P_{E\,H}\,y_{Eh} + P_{w\,H}\,y_{qh}$

$= (14.0 \times 1.844) + (60.8 \times 1.229) + (-0.44 \times 0.100) + (1.77 \times 0.200) + (0.13 \times 4.100)$
$+ (0.15 \times 4.100) + (0.0 \times 2.600) + (0.0 \times 4.100) + (0.00 \times 0.0)$

$= 102.0$ kN.m/m

This is the same as M_o calculated above.

Restoring moment about intersection of centre line of reaction and underside of base at the bearing pad

$M'_r = P_{f\,V}\,x'_{fv} + P_{f\,slope\,V}\,x'_{f\,slope\,v} + P_{q\,V}\,x'_{qv} + P_{s\,V}\,x'_{sv} + P_{Dv}\,x'_{DV} + P_{Lv}\,x'_{LV} + P_{w\,V}\,x'_{fv\;wu} + P_{bp}\,y_p$

$= (114.7 \times 0.416) + (7.58 \times 0.935) + (6.45 \times 1.541) + (28.0 \times 1.526)$
$+ (4.80 \times -0.345) + (0.00 \times -0.345) + (-9.89 \times 0.375) + (0.82 \times 0.067)$

$= 102.0$ kNm/m

$\geq M'_o = 102.0$ kN.m/m OK

Factor of Safety against overturning failure

$F_{overturning} = M'_o / M'_r$
$= 102.0 / 102.0$
$= 1.00$

This calculation confirms that the eccentricity has been correctly calculated, resulting in the factored moments resisting overturning about the centroid of bearing pad reaction being equal to the factored moments causing overturning about the centroid of bearing pad reaction.

Appendix 2
Comparison to Working Stress Calculations in accordance with Code of Practice No 2

Soil Design Properties

Retained Soil
In this case, the retained soil is “in-situ” material.

Any gap between the retaining structure and the retained soil should be filled with compacted infill-material. However, because failure planes may still form in the in-situ material, the design in this example will be based on the retained soil.

Alternatively, the insitu material could be excavated and replaced to such a depth that any failure planes are forced to form in the infill material.

Retained soil design internal friction angle
φ_r = 30.0^o

Retained soil design cohesion
c_r = 5.0 kPa
Except in those cases of relatively low retaining walls where the Rankine-Bell method is used, cohesion of the retained soil will be assumed to be zero.

Retained soil design external friction angle
δ_r = $0.667\ \varphi_r$
= 0.667 x 30.0
= 20.0^o against relatively smooth concrete

= $1.0\ \varphi_r$
= 1.0 x 30.0^o
= 30.0^o against no-fines concrete

= $1.0\ \varphi_r$
= 1.0 x 30.0^o
= 30.0^o against compacted infill soil

Allowance should be made for the effect of any geotextile or geocomposite that is incorporated into the structure.

Active pressure coefficient of retained soil

$$K_a = \frac{\cos^2(\varphi_r + \omega)}{\cos^2\omega\cos(\omega - \delta)[1+\{\sin(\varphi_r + \delta)\sin(\varphi_r - \beta) / \cos(\omega - \delta)\cos(\omega + \beta)\}^{0.5}]^2}$$

$$= \frac{\cos^2(30.0^o + 1.43^o)}{\cos^2(1.43^o)\cos(1.43^o-30.0^o)[1+\{\sin(30.0^o+30.0^o)\sin(30.0^o-11.0^o) / \cos(1.43^o-30.0^o)\cos(1.43^o+11.0^o)\}^{0.5}]^2}$$

= 0.335

Foundation Soil
In this case, the retained soil is “in-situ” material.

Any over-excavation should be filled with compacted cement-stabilised road base.

Foundation soil design internal friction angle
φ_f = 30.0 ^{o}

Foundation soil design cohesion
c_f = 5.0 kPa

Foundation soil design external friction angle
δ_f = 0.667 φ_f
= 0.667 x 30.0
= 20.0^o against relatively smooth concrete

= 1.0 φ_f
= 1.0 x 30.0^o
= 30.0^o against no-fines concrete

= 1.0 φ_f
= 1.0 x 30.0^o
= 30.0 ^{o} against compacted infill soil

Allowance should be made for the effect of any geotextile or geocomposite that is incorporated into the structure.

Active pressure coefficient of foundation soil
K_a = 0.335

This is assumed to be the same as the active pressure coefficient for the retained soil, including:

- soil to rough surface or soil to soil
- consideration of the lay-back
- consideration of the slope of retained soil.

Passive pressure coefficient of foundation soil

$$K_p = \frac{1 + \sin(\varphi_f)}{1 - \sin(\varphi_f)}$$

$$= \frac{1 + \sin(30.0^o)}{1 - \sin(30.0^o)}$$

= 3.00

Infill Soil

Depending on the type of earth retaining structure and the profile of the existing embankment to be retained, it may be necessary to place infill soil between the embankment and the structure. In this case, the infill soil will be specified as one of the following: gravelly and compacted sands, controlled crushed sandstone and gravel fills (Class 1), dense well graded sands. The infill material will be compacted to Class C2.[4]

Infill soil density

γ_f = 20 kN/m^3

Infill soil conservative estimate of the mean internal friction angle

φ_f = 30°

Infill soil conservative estimate of the mean cohesion

c_f = 3.0 kPa

A value of zero will be used in the design.

Infill soil design external friction angle

δ_i = 0.667 φ_i
= 0.667 x 30.0
= 20.0^o against relatively smooth concrete

= 1.0 φ_i
= 1.0 x 30.0^o
= 29.4^o against no-fines concrete

= 1.0 φ_i
= 1.0 x 30.0^o
= 30.0^o against compacted infill soil

Allowance should be made for the effect of any geotextile or geocomposite that is incorporated into the structure.

[4] Refer to AS 4678 for definition of the compaction.

Bearing Pad
In this case, the bearing pad shall consist of compacted controlled fill, with 5% cement-stabilised crushed rock, WET when blocks laid, min strength

Specified compressive strength
f'_c = 5.0 MPa

Bearing pad density
γ_b = 20 kN/m^3

Bearing pad onservative estimate of the mean internal friction angle
φ_b = 40°

Bearing pad conservative estimate of the mean cohesion
c_b = 0.1 kPa

For a granular base, the cohesion is normally zero, and the adhesion is therefore also zero. In this example, a small nominal value of 0.1 kPa has been assumed for both adhesion and cohesion to demonstrate the method. In practice, it is common for a designer to ignore this value.

Bearing pad design external friction angle[5]
δ_b = 0.667 φ_b
= 0.667 x 40.0
= 26.7^o against relatively smooth concrete

= 1.0 φ_b
= 1.0 x 40.0^o
= 40.0^o against no-fines concrete

= 1.0 φ_f
= 1.0 x 40.0^o
= 40.0^o against compacted infill soil (Infill soil governs)

[5] The values above are reasonably consistent with the NCMA approach, which uses the following:
Sliding resistance coefficient of levelling pad to other soil, $C_{ds\,b}$ = 1.0
Sliding resistance coefficient of levelling pad to smooth masonry, μ_b = 0.68

EXTERNAL STABILITY AT WORKING LOADS AND RESISTANCES

Horizontal Forces

Horizontal active force due to surcharge

$P_{q\,H}$ $= K_{ar}\,[G_{do}\,q_d + G_{lo}\,q_q + G_{wo}\;q_{wo} + G_{eo}\,q_{eo})\;H\cos(\delta_r - \omega)$

$= 0.335\,[(1.0 \times 2.5) + (1.0 \times 5.0) + (0 \times 0.1) + (0 \times 0.1)]\;3.688 \times \cos(30.0^o - 1.43^o)$

$= 8.14$ kN/m

Permanent load component is 2.8 kN/m
Imposed load component is 5.5 kN/m

Horizontal active force due to soil

$P_{s\,H}$ $= K_{ar}\;0.5\,(G_{do}\,\gamma^*_r)\;H_1^2\cos(\delta^*_r - \omega)$

$= 0.335 \times 0.5\,(1.0 \times 20.0)\;3.688^2 \times \cos(30.0^o - 1.43^o)$

$= 40.0$ kN/m

Horizontal force due to water in front of wall

$P_{w\,front}$ $= -\,0.5\,\gamma^*_w\,(H_{w\,front} + H_{emb})^2$

$= -\,[0.5 \times 9.81 \times (0.100 + 0.200)^2]$

$= -0.44$ kN/m

Horizontal force due to water behind infill

$P_{w\,rear}$ $= 0.5\,\gamma^*_w\,(H_{w\,rear} + H_{emb})^2$

$= 0.5 \times 9.81 \times (0.400 + 0.200)^2$

$= 1.77$ kN/m

Horizontal force due to dead line load

$P_{D\,H}$ $= G_{do}\,D_H$

$= 1.0 \times 0.1$

$= 0.10$ kN/m

Horizontal force due to live line load at top

$P_{L\,H}$ $= G_{lo}\,L_H$

$= 1.\,0 \times 0.1$

$= 0.10$ kN/m

Horizontal force due to wind line load at top

$P_{W\,H}$ $= G_{wo}\,W_H$

$= 0 \times 4.3$

$= 0.0$ kN/m

Horizontal force due to earthquake line load at top

$P_{E\,H}$ $= G_{eo}\,E_H$

$= 0 \times 0.6$

$= 0.0$ kN/m

Horizontal active force due to water in tension cracks

$P_{wc\,H}$ $= 0.0$ kN/m

This force will only apply in some cases of cohesive soil (when using Rankine-Bell method), where the fill is not protected against ingress of water.

Total horizontal forces causing forward movement
(at the interface between the retaining structure and bearing pad)

P_{bH} $= P_{q\,H} + P_{s\,H} + P_{w\,front} + P_{w\,rear} + P_{D\,H} + P_{L\,H} + P_{W\,H} + P_{E\,H} + P_{wc\,H}$

$= 8.14 + 40.0 - 0.44 + 1.77 + 0.10 + 0.10 + 0.0 + 0.0 + 0.0$

= 49.7 kN/m

Horizontal active force due to surcharge on bearing pad

P_{bpqH} = K_{ar} [G_{do} q_d + G_{lo} q_d + G_{wo} q_{wo} + G_{eo} q_{eo}) H_{bp} cos (δ_r)
= 0.335 [(1.0 x 2.5) + (1.0 x 5.0) + (0 x 0.1) + (0 x 0.1)] 0.270 x cos (30.0^o)
= 0.59 kN/m

The same active pressure coefficent as is applicable for the upper part of the retaining structure, K_{ar}, has been used. This is based on:

- The <u>internal</u> friction angle for retained soil (acting against bearing pad granular material)
- The layback of the upper structure, ω. (Slightly non-conservative assumption)

Horizontal active force due to soil on bearing pad

P_{bpsH} = K_{ar} (G_{dos} γ_b) 0.5 [H + (H +H_{bp})] H_{bp} cos (δ_r)
= 0.335 x 1.0 x 20.0 x 0.5 x [3.688 + (3.688 + 0.270)] x 0.270 x cos (30°)
= 5.99 kN/m

The average pressure, acting on the thickness of bearing pad, H_{bp}, is at a depth of 0.5 [H + (H + H_{bp})]

The same active pressure coefficent as is applicable for the upper part of the retaining structure, K_{ar}, has been used. See comment above.

Total horizontal forces causing forward movement
(at the interface between the bearing pad and foundation)

P_{bH} = $P_{b\,H}$ + P_{bpqH} + P_{bpsH}
= 49.7 + 0.59 + 5.99
= 56.2 kN/m

Vertical Forces

Vertical weight of the gravity structure

$P_{f\,V}$ = G_{dr} γ_{su} W_{uc} H_w
= 1.0 x 20.0 x 2.240 x 3.200
= 143.4 kN/m

Vertical load due to sloping soil above the structure

$P_{f\,slopeV}$ = G_{dr} γ_{su} 0.5 (W_{uc} – W_u) h
= 1.0 x 20 x 0.5 x (2.240 – 0.300) x 0.488
= 9.47 kN/m

Vertical friction component of active surcharge load acting on the retained soil behind the structure

$P_{q\,V}$ = K_{ar} [G_{do} q_d + G_{lo} q_d + G_{wo} q_{wo} + G_{eo} q_{eo}) H_1 sin (δ_r – ω)
= 0.335 [(1.0 x 2.5) + (1.0 x 5.0) + (0 x 0.1) + (0 x 0.1)] 3.688 x sin (30.0^o – 1.43^o)
= 4.43 kN/m

Vertical friction component of active soil load behind the structure

$P_{s\,V}$ = K_{ar} 0.5 (G_{do} γ^*_r) H_1^2 sin (δ_r – ω)
= 0.335 x 0.5 (1.0 x 20.0) 3.688^2 x sin (30.0^o – 1.43^o)
= 21.8 kN/m

Vertical line dead load (on wall stem & no-fines concrete)

P_{Dv} = G_{dr} D_v

= 1.0 X 6.0
= 6.0 kN/m

Vertical line live load (on wall stem & no-fines concrete)
P_{Lv} = G_{lr} L_v
= 0.0 X 0.1
= 0.00 kN/m

Vertical uplift force of ground-water displaced by the retaining structure
$P_{w\,V}$ = $-\gamma^*_w \{0.5\,(H_{w\,front} + H_{w\,rear}) + H_{emb}\}\ W_{uc}$
= -9.81 x {0.5 x (0.100 + 0.400) + 0.200} x 2.240
= -9.89 kN/m

It is assumed that the water table varies linearly from the rear of the retaining structure to the front

Total vertical force at the interface of the retaining structure and bearing pad
P_V = $P_{f\,V} + P_{f\,slope\,V} + P_{q\,V} + P_{s\,V} + P_{Dv} + P_{Lv} + P_{w\,V}$
= 143.4 + 9.47 + 4.43 + 21.8 + 6.0 + 0.00 – 9.89
= 175.2 kN/m

Weight of bearing pad
P_{bpV} = $G_{dr}\ \gamma^*_b\ H_{bp}\ B$
= 1.0 x 20.0 x 0.270 x 3.320
= 17.9 kN/m

- The weight of the bearing pad has been calculated using the effective width of the bearing pad, B, with includes allowance for the spread of load from the underside of the retaining structure, down through the bearing pad.
- The effective width of the bearing pad, B, can not exceed the actual width of the bearing pad, B_{act}.
- Weights and reactions outside the extent of the effective width of the bearing pad, B, are considered to balance each other and are disregarded in the calculations.
- Provided that the effective width of the bearing pad, B, does not extend behind the rear of the structure, the assumptions above will be valid.

Vertical uplift force of ground-water displaced by the bearing pad
$P_{bp\ w\,V}$ = $-\gamma^*_w\ H_{bp}\ B$
= -9.81 x 0.270 x 3.320
= -8.8 kN/m

It is assumed that:
- The water table varies linearly from the rear of the retaining structure to the front
- The volume of water is that which is displaced by the part of the bearing pad which participates in supporting the loads of the structure.
  i.e. depth of bearing pad submerged x effective width under bearing pad, B

Vertical friction component of active surcharge force acting on the bearing pad
$P_{bp\,qV}$ = $K_{ar}\ [G_{do}\,q_d + G_{lo}\,q_d + G_{wo}\ q_{wo} + G_{eo}\ q_{eo})\ H_{bp} \sin(\delta_r)$
= 0.335 [(1.0 x 2.5) + (1.0 x 5.0) + (0 x 0.1) + (0 x 0.1)] 0.270 x sin (30.0^o)

= 0.3 kN/m

Vertical friction component of active soil load acting on the bearing pad

$P_{bp\ sV}$ = 0.5 K_{ar} (G_{dos} γ_b) (2 H + H_{bp}) H_{bp} sin (δ_r)
= 0.5 x 0.335 x 1.25 x 20.0 x [(2 x 3.688) + 0.270) x 0.270 x sin (30°)
= 3.5 kN/m

Total vertical forces at the interface between the bearing pad and foundation

P_{bV} = P_{bH} + P_{bpV} + $P_{bp\ w\ V}$ + $P_{bp\ H}$ + P_{bpsH}
= 175.2 + 17.9 - 8.8 + 0.3 + 3.5
= 188.1 kN/m

Vertical Lever Arms

Vertical lever arm of horizontal surcharge load above toe

y_{qh} = 0.5 H
= 0.5 x 3.688
= 1.844 m

Vertical lever arm of horizontal soil load above toe

y_{qh} = 0.333 H
= 0.333 x 3.688
= 1.229 m

Vertical lever arm of horizontal force due to water in front of wall

y_{wf} = 0.333 ($H_{w\ front}$ + H_{emb})
= 0.333 x (0.100 + 0.200)
= 0.100 m

Vertical lever arm of horizontal force due to water behind infill

y_{wb} = 0.333 ($H_{w\ rear}$ + H_{emb})
= 0.333 x (0.400 + 0.200)
= 0.200 m

Vertical lever arm of dead line loads above toe

y_{Dh} = 3.900 + 0.200
= 4.100 m

Vertical lever arm of live line loads above toe

y_{Lh} = 3.900 + 0.200
= 4.100 m

Vertical lever arm of wind line loads above toe

y_{Wh} = 0.5 (H_1 + $H_{barrier}$) + H_{emb}
= 0.5 x (3.000 + 1.800) + 0.200
= 2.600 m

Vertical lever arm of earthquake line loads above toe

y_{Eh} = 3.900 + 0.200
= 4.100 m

Vertical lever arm on passive pressure in front of embedment

y_p = 0.333 H_{emb}
= 0.333 x 0.200
= 0.067 m

Depth of tension cracks in fissured cohesive soil
The following approach is applicable to the application of water in tension cracks in cohesive soils.
H_c = 2 c' / (g K_{ar} 0.5) - (G_{do} q_d + G_{lo} q_l) / (G_{do} g)
= 0 m

Vertical lever arm of horizontal water in tension cracks
y_{qh} = H_1 – 0.667 H_c
= 0 m

Horizontal Lever Arms
Horizontal lever arms may be calculated from any point, and the toe is commonly selected as the reference point. A check of overturning about the centroid of reaction will be carried out later, but at this stage in the calculations, the eccentricity is unknown.

Horizontal lever arm for retaining system (block + no-fines concrete)
x_{fv} = 0.5 (W_u + B) + 0.5 (H_1 + H_{emb}) tan ω
= [0.5 x (0.300 + 1.940)] + [0.5 x (3.000 + 0.200) tan (1.43^o)]
= 1.160 m

Horizontal lever arm of sloping soil
$x_{f\ slope\ v}$ = W_u + 0.667 L' + (H_1 + H_{emb} + 0.5 h) tan ω
= 0.3 + (0.667 x 1.940) + [(3.000 + 0.200 + {0.5 x 0.488}) tan (1.43^o)]
= 1.679 m

Horizontal lever arm for vertical surcharge load
x_{qv} = W_u + B + 0.5 H tan ω
= 0.300 + 1.940 + [0.5 x 3.688 x tan (1.43^o)]
= 2.286 m

Horizontal lever arm for vertical soil load
x_{sv} = W_u + B + 0.333 H tan ω – x'
= 0.300 + 1.940 + [0.333 x 3.688 x tan (1.43^o)]
= 2.271 m

Horizontal lever arm to vertical line dead load
x_{DV} = 0.400 m
Nominated in design brief

Horizontal lever arm of vertical line live load
x_{LV} = 0.400 m
Nominated in design brief

Horizontal lever arm from toe for water uplift
$x_{fv\ wu}$ = 0.5 W_{uc}
= 0.5 x 2.240
= 1.120 m

Sliding Resistance of Structure on Bearing Pad

Friction resistance of structure on bearing pad

P_{bf} = $P_v \tan(\varphi_b)\ \Phi_n$
= 175.2 x tan(40.0) x 1.0
= 147.0 kN/m

The vertical load, P_v, is the sum of vertical loads that have already been factored by the relevant load factor for resisting loads, G_{drs}

In this example, it is assumed that the interface between the retaining structure (granular soil fill in hollow concrete facing units plus either compacted infill soil of no-fines concrete) is rough. Therefore the appropriate external friction angle is the minimum of the internal friction angles of the structure and the bearing pad.

If the retaining structure surface had been substantially smooth concrete, the appropriate external friction angle would be some lesser value, approximately two thirds of the internal friction angle.

Base adhesion of structure on bearing pad

P_{ba} = $(G_{drs}\ c_{bv}\ W_{uc}\ \Phi_n$
= (1.0 x 0.10) x 2.24 x 1.0
= 0.22 KN/m

The adhesion of a retaining structure on a bearing pad is the minimum of the adhesion (stickiness) of the interface and the cohesion of the bearing pad material. For a granular base, the cohesion is normally zero, and the adhesion is therefore also zero. For a cement stabilized material where the units are laid before the cement has hydrated, there may be some small value of adhesion. In this example, a small nominal value has been assumed to demonstrate the method. In practice, it is common for a designer to ignore this value.

The components of base adhesion have <u>not</u> already been factored by the relevant load factor for resisting loads, G_{drs} , which should be included in this formula.

Resisting passive earth pressure on structure

P_{bp} = $0.5\ K_{pb}\ (G_{drs}\ \gamma_b)\ H_{emb}^2\ \Phi_n$
= $0.5 \times 3.0 \times 1.0 \times 20.0 \times 0.200^2 \times 1.0$
= 1.20 KN/m

It is the designer's choice of whether or not to use passive resistance, giving consideration to issues of disturbance, erosion and poor compaction of the material in front of the structure. It is common practice to ignore passive resistance.

The components of passive resistance have <u>not</u> already been factored by the relevant load factor for resisting loads, G_{drs} , which should be included in this formula.

Total sliding resistance of facing on bearing pad

R_b = $P_{bf} + P_{ba} + P_{bp}$
= 147.0 + 0.22 + 1.20
= 148.4 kN/m
> P_{bH} = 49.7 kN/m OK
Factor against sliding = R_{sd} / P_H
= 148.4 / 49.7
= 2.99

Sliding Resistance of Bearing Pad on Foundation

Friction resistance of bearing pad on foundation

P_{ff} = P_{fv} tan(φ_b) Φ_n

= 188.2 x tan(30.0^o) x 1.0

= 108.6 KN/m

The appropriate external friction angle is the lesser of the values for the bearing pad and the foundation.

Base adhesion of structure on bearing pad

P_{fa} = (G_{drs} c^*_{bv} W_{uc} Φ_n

= (1.0 x 5.0) x 2.24 x 1.0

= 11.2 KN/m

The adhesion of a bearing pad on the foundation approximates the cohesion of the foundation. In this example, a small nominal value has been assumed to demonstrate the method. In practice, it is common for a designer to ignore this value.

The components of foundation adhesion have <u>not</u> already been factored by the relevant load factor for resisting loads, G_{drs} , which should be included in this formula.

Resisting passive earth pressure on structure

P_{fp} = 0.5 K_{pb} (G_{drs} γ_b) (H_{emb} + H_{bp})^2 Φ_n

= 0.5 x 3.0 x 1.0 x 20.0 x (0.200 + 0.270)^2 1.0

= 6.6 kN/m

It is the designer's choice of whether or not to use passive resistance, giving consideration to issues of disturbance, erosion and poor compaction of the material in front of the structure. It is common practice to ignore passive resistance.

The components of passive resistance have <u>not</u> already been factored by the relevant load factor for resisting loads, G_{drs} , which should be included in this formula.

Total sliding resistance of facing on bearing pad

R_f = P_{fH} + P_{adH} + P_{pH}

= 108.6 +11.2 + 6.6

= 126.4 kN/m

> P_{fH} = 56.2 kN/m OK

Factor against sliding = R_f / P_{fH}

= 126.4 / 56.2

= 2.25

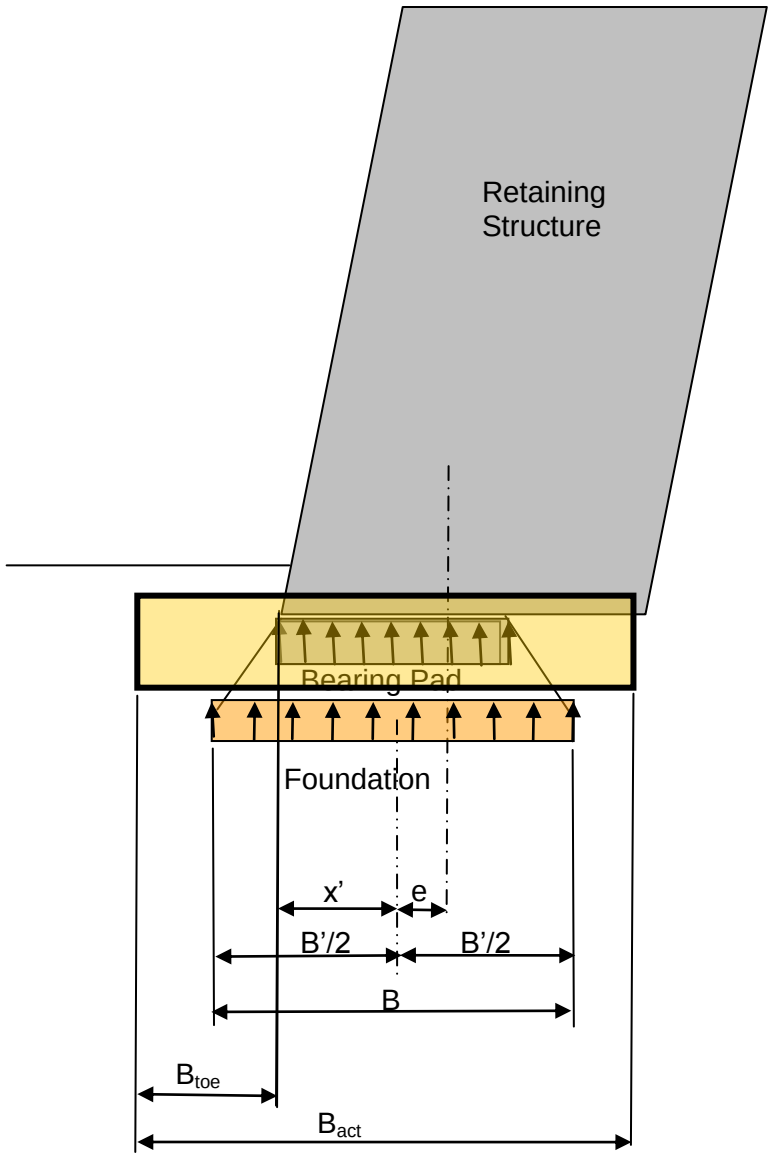

Eccentricity of Reaction

Take moments about the toe

Overturning moment about the toe

M_o $= P_{q\,H}\,y_{qh} + P_{s\,H}\,y_{qh} + P_{w\,front}\,y_{wf} + P_{w\,rear}\,y_{wb} + P_{D\,H}\,y_{Dh} + P_{L\,H}\,y_{Lh} + P_{W\,H}\,y_{Wh} + P_{E\,H}\,y_{Eh} + P_{w\,H}\,y_{qh}$

$= (8.14 \times 1.844) + (40.0 \times 1.229) + (-0.44 \times 0.100) + (1.77 \times 0.200) + (0.10 \times 4.100)$

$+ (0.10 \times 4.100) + (0.0 \times 2.600) + (0.0 \times 4.100) + (0.00 \times 0.0)$

$= 65.3$ kN.m/m

Restoring moment about the toe

M_r $= P_{f\,V}\,x_{fv} + P_{f\,slope\,V}\,x_{f\,slope\,v} + P_{q\,V}\,x_{qv} + P_{s\,V}\,x_{sv} + P_{Dv}\,x_{DV} + P_{Lv}\,x_{LV} + P_{w\,V}\,x_{fv\,wu}$

$= (143.4 \times 1.160) + (9.53 \times 1.679) + (4.43 \times 2.286) + (21.8 \times 2.271) + (6.0 \times 0.400)$

$+ (0.00 \times 0.400) + (-9.89 \times 1.120)$

$= 233.3$ kNm/m

Eccentricity of reaction (measured from toe)

x' $= (M_r - M_o) / P_v$

$= (233.3 - 65.3) / 175.2$

$= 0.959$ m

$> W_{uc} / 3$

$= 2.240 / 3$

= 0.720 Reaction is within the middle third of the base – ok

Eccentricity of reaction (measured from centreline)

e = $0.5\ W_{uc} – x'$
= (0.5 x 2.240) – 0.959
= 0.161 m

Bearing Capacity at the Interface between the Bearing Pad and the Foundation

The bearing capacity at the interface between the bearing pad and the foundation is determined by Terzagghi analysis, modified by Vesic factors inclined load etc.

Effective width of bearing pad

B' = B – 2e
= 3.320 – (2 x 0.161)
= 2.997 m

This is the width of bearing pad into which the vertical load is distributed, giving consideration to the effect of the lateral load and the particular material, its strength and stiffness.

N_q = $e^{\pi \tan \phi^* f} \tan^2 [\ \pi/4 + \phi_f /2\ ]$
= $e^{3.14 \tan (30.0)} \tan^2 [\ (3.14 / 4) + (30.0^o / 2)]$
= 18.4

N_c = $(N_q - 1) \cot \phi_f$
= $(18.4 – 1) \cot (30.0^o)$
= 30.1

N_γ = $2\ (N_q + 1) \tan \phi_f$
= $2\ (18.4 + 1) \tan (30.0^o)$
= 22.4

Shape factors

ξ_c = 1.0
ξ_q = 1.0
ξ_γ = 1.0

Factors for inclined load

ξ_{qi} = $[\ 1 - P_H / (\ P_v + B'\ c_f \cot \phi_f)\ ]^2$
= $[\ 1 – 56.2 / \{188.2 + 2.997 \times 5.0 \times \cot (30.0^o)\}\ ]^2$
= 0.544

ξ_{ci} = $\xi_{qi} - (1 - \xi_{qi}\ ) / (\ N_c \tan \phi^*_f)$
= $0.544 – [(1 – 0.544) / (30.1 \times \tan (30.0^o)]$
= 0.517

$\xi_{\gamma i}$ = $[\ 1 - P_H / (\ P_v + B'\ c \cot \phi^*_f)\ ]^3$
= $[\ 1 – 56.2 / \{188.2 + 2.997 \times 5.0 \times \cot (30.0^o)\}\ ]^3$
= 0.401

Factors for sloping bases

ξ_{qt} = $(1 - \alpha \tan \phi^*_f)^2$
= 1.0 for level base

ξ_{ct} = $\xi_{qt} - (1 - \xi_{qt}\ ) / (\ N_c \tan \phi^*_f)$
= 1.0 for level base

$\xi_{\gamma t}$ = $(1 - \alpha \tan \phi^*_f)^2$
= 1.0 for level base

Average bearing capacity based on factored soil properties

q_{av} = $c\ N_c\ \xi_c\ \ \xi_{ci}\ \ \xi_{ct} + \gamma\ (H_{emb} + H_{bp})\ N_q\ \xi_q\ \xi_{qi}\ \xi_{qt} + 0.5\ \gamma\ B\ N_\gamma\ \ \xi_\gamma\ \xi_{\gamma i}\ \xi_{\gamma t}$
= (5.0 x 30.1 x 1.0 x 0.517 x 1.0) + (20.0 x [0.200 + 0.270) x 18.4 x 1.0 x 0.544 x 1.0) +
(0.5 x 20.0 x 3.320 x 22.4 x 1.0 x 0.401 x 1.0)
= 470.1 kPa

Bearing capacity of the foundation

$P_{v\ cap}$ = q_{av} B'
= 470.1 x 2.997
= 1,409.1 kN
> 188.1 kN OK

Factor of Safety against bearing failure

$F_{bearing} = P_{v\ cap} / P_v$
= 1,409.1 / 188.2
= 7.49

Check of Overturning About the Centroid of Reaction

Lever arms are measured from the centroid of reaction, by subtracting x' from the lever arms calculated from the toe.

Horizontal lever arm for retaining system (block + no-fines concrete)

x'_{fv} = 0.5 (W_u + B) + 0.5 (H_1 + H_{emb}) tan ω – x'

= [0.5 x (0.300 + 1.940)] + [0.5 x (3.000 + 0.200) tan (1.43^o)] – 0.959

= 0.201 m

Horizontal lever arm of sloping soil

$x'_{f\ slope\ v}$ = W_u + 0.667 L' + (H_1 + H_{emb} + 0.5 h) tan ω – x'

= 0.3 + (0.667 x 1.940) + [(3.000 + 0.200 + {0.5 x 0.488}) tan (1.43^o)] – 0.959

= 0.721 m

Horizontal lever arm for vertical surcharge load

x'_{qv} = W_u + B + 0.5 H tan ω – x'

= 0.300 + 1.940 + [0.5 x 3.688 x tan (1.43^o)] – 0.959

= 1.327 m

Horizontal lever arm for vertical soil load

x'_{sv} = W_u + B + 0.333 H tan ω – x'

= 0.300 + 1.940 + [0.333 x 3.688 x tan (1.43^o)] – 0.959

= 1.312 m

Horizontal lever arm to vertical line dead load

x'_{DV} = x_{DV} – x'

= 0.400 — 0.959

= -0.559 m

Horizontal lever arm of vertical line live load

x'_{LV} = x_{LV} – x'

= 0.400 – 0.959

= -0.559 m

Horizontal lever arm from toe for water uplift

$x'_{fv\ wu}$ = 0.5 W_{uc} – x'

= (0.5 x 2.24) – 0.959

= 0.161 m

Take moments about intersection of centre line of reaction and underside of base at the bearing pad

Overturning moment about intersection of centre line of reaction and underside of base at the bearing pad

$M'_o = P_{q\,H}\,y_{qh} + P_{s\,H}\,y_{qh} + P_{w\,front}\,y_{wf} + P_{w\,rear}\,y_{wb} + P_{D\,H}\,y_{Dh} + P_{L\,H}\,y_{Lh} + P_{W\,H}\,y_{Wh} + P_{E\,H}\,y_{Eh} + P_{w\,H}\,y_{qh}$

$= (8.14 \times 1.844) + (40.01 \times 1.229) + (-0.44 \times 0.100) + (1.77 \times 0.200) + (0.10 \times 4.100)$
$+ (0.10 \times 4.100) + (0.0 \times 2.600) + (0.0 \times 4.100) + (0.00 \times 0.0)$

$= 65.3$ kN.m/m

This is the same as M_o calculated above.

Restoring moment about intersection of centre line of reaction and underside of base at the bearing pad

$M'_r = P_{f\,V}\,x'_{fv} + P_{f\,slope\,V}\,x'_{f\,slope\,v} + P_{q\,V}\,x'_{qv} + P_{s\,V}\,x'_{sv} + P_{Dv}\,x'_{DV} + P_{Lv}\,x'_{LV} + P_{w\,V}\,x'_{fv\ wu} + P_{bp}\,y_p$

$= (143.4 \times 0.201) + (9.53 \times 0.721) + (4.43 \times 1.327) + (21.8 \times 1.312)$
$+ (6.0 \times -0.559) + (0.00 \times -0.559) + (-9.89 \times 0.161) + (1.20 \times 0.067)$

$= 65.3$ kNm/m

$\geq M'_o = 65.3$ kN.m/m OK

Factor of Safety against overturning failure

$F_{overturning} = M'_o / M'_r$
$= 65.3 / 65.3$
$= 1.00$

This calculation confirms that the eccentricity has been correctly calculated, resulting in the factored moments <u>resisting</u> overturning about the centroid of bearing pad reaction being equal to the factored moments <u>causing</u> overturning about the centroid of bearing pad reaction.

Appendix 3
Considerations for Cohesive Soils

Background
The stability of an embankment is influence by loading, ground water and soil properties. The most common soil properties are:

- Density
- Internal friction angle
- External friction angle
- Cohesion, taken in this paper to include the combined effect of all properties that enable the embankment to remain stable at zero internal friction.

There are practical limitations in respect of the use of cohesion, including its unpredictability, particularly when there is groundwater present or when water can fill tension cracks in fissured clay. Extreme caution should be exercised by the design engineer in these circumstances.

Notwithstanding these limitations, it is instructive to consider cohesion in the case of relatively low retaining walls in some soils. If one describes the soil in an embankment in terms of both friction and cohesion (either based on test results and/or observation) and then ignores the cohesion component, the performance of the embankment will probably be underestimated.

The analysis set out in this manual is based on the use of the Coulomb formula, ignoring any contribution stability provided by cohesion. There are two common approaches, set out below, that can be used to account for cohesion.

- Rankine-Bell Analysis
- General Wedge Analysis.

This paper does not seek to differentiate between the methods, or to comment on their relative reliabilities. However, caution is strongly recommended if a designer should choose to use either or both of the methods.

Rankine-Bell Analysis

As a guide, the following limitations on the use of the Rankine-Bell method are reproduced from CMAA MA 53 Appendix D.

- *All retaining walls are designed to AS 4678 (Including Amendment 1).*
- *All retaining walls shall comply with AS 4678 Structure Classification A.*
- *Heights shall be within the range 800 mm to 1200 mm.*
- *All retaining walls are designed for level backfill. If the backfill has a slope greater than 1 in 8, these tables will not be applicable.*
- *These tables are only applicable to retaining walls that incorporate an impermeable surface membrane and drainage system such that there can be no ingress of any water into the soil behind the retaining wall.*
- *Structures that do not incorporate an impermeable surface membrane and drainage system such that there can be no ingress of any water into the soil behind the retaining wall are deemed to be outside the scope of the tables.*
- *Retained soil shall have a Plasticity Index, PI, less than 20.*
- *The Table is applicable to cuts in insitu soils. The tables are not applicable to cohesive fill.*
- *The Table applies to concrete retaining wall units of depth 280, 300 and 320 mm and a combined density of block and granular fill of 1860 kg/m^3 or more.*
- *All retaining walls are designed for an imposed load of 2.5 kPa. If imposed loads greater than 2.5 kPa are expected, these designs will not be appropriate.*
- *These tables are based on a 0.8 factor on the vertical component of soil friction, for both permanent and imposed soil and surcharge loads.*
- *These tables apply only where footings consist of at least 5% cement-stabilised crushed rock to dimensions shown.*
- *Before the bottom course is positioned, the footing should be moistened to ensure bond between the block and footing.*
- *The tables are based on the assumption that, within the above-mentioned limits, the active pressure coefficients, K_a , calculated using the Rankine Bell method are conservative for sloping walls.*
- *……*

Example
This is an extension of the worked example in Appendix 2.

Wall height
H = 3.688 m

Backfill slope
β = 11°

Dead load factor
G_{do} = 1.25

Dead load surcharge
q_{do} = 2.50 kPa

Live load factor
G_{lo} = 1.50

Live load surcharge
q_{lo} = 5.00 kPa

Water load factor

G_w = 1.00

Characteristic internal angle of friction
φ_r = 30.0^o

Design uncertainty factor for friction
Φ_{ufr} = 0.85

Design angle of friction
φ^*_r = 26.1^o

Characteristic cohesion
c_r = 5.0 kPa

Design uncertainty factor for cohesion
Φ_{ucr} = 0.70

Design cohesion (factored effective cohesion)
$c'_r = c_r \Phi_{ucr}$
= 5.0 x 0.70
= 3.5 kPa

Soil density
γ^*_r = 20.0 kN/m^3

Horizontal component of active pressure coefficient (Rankine-Bell Method for Level backfill)
$K_{ar} = (1 - \sin \varphi^*_r) / (1 + \sin \varphi^*_r)$
$= (1 - \sin 26.1^o) / (1 + \sin 26.1^o)$
= 0.388

Horizontal component of active pressure coefficient (Rankine-Bell Method for Sloping backfill)
$K_{ar} = \cos\beta\, [\cos \beta - (\cos^2 \beta - \cos^2 \varphi^*_r)^{0.5}] / [\cos \beta + (\cos^2 \beta - \cos^2 \varphi^*_r)^{0.5}]$
$= \cos(11).[\cos(11.0) - (\cos^2(11.0) - \cos^2(26.1))^{0.5}] / [\cos (11.0) + (\cos^2(11.0) - \cos^2(26.1))^{0.5}]$
= 0.416

Design active pressure coefficient
K_{ar} = 0.416

Net pressure at the surface considering surcharge and cohesion
$p_{at} = K_{ar} (G_{do}\, q_d + G_{lo}\, q_l) - 2\, c^*_r\, K_{ar}^{0.5}$
$= (0.416 \times ((1.25 \times 2.5) + (1.5 \times 5.0)) - (2 \times 3.5 \times 0.416^{0.5})$
= -0.09 kPa

Net pressure at the surface considering surcharge and cohesion is “Negative”.

If the net pressure at the surface is positive, tension cracks will not be able to form in the retained soil. This occurs when the surcharge is relatively high and/or the cohesion is relatively low. In such a case, cohesion will be ignored, and the retaining wall will be designed for both soil and surcharge using the Coulomb formula.

If the net pressure at the surface is negative, tension cracks may form in the retained soil. The following expression permits the calculation of the depth of tension cracks, allowing for the combined effects of cohesion and surcharge. At this depth, surcharge load has been dissipated in overcoming the soil cohesion. That is, the soil (supporting both the surcharge and its own weight) may stand alone to this depth, without the aid of a retaining wall. Below this depth, there is no further need to consider surcharge. Tension cracks in the retained soil may fill with water and exert a pressure on the top part of the wall to this depth.

Depth of cracks

H_c = 2 c' / (γ $K_{ar}^{0.5}$) - (G_{do} q_d + G_{lo} q_l) / (G_{do} γ_r)
= 2 x 3.5 / (20.0 x $0.416^{0.5}$) - ((1.25 x 2.50) + (1.5 x 5.00)) / (1.25 x 20.0)
= 0.118 m

The active forces due to soil and surcharge act at an angle generally greater than the backfill slope. In this analysis, the forces are assumed to act horizontally for all combinations of friction and cohesion.

Horizontal active force due to soil

p'_a = 0.5 K_{ar} G_{do} γ_r $(H - z_0)^2$
= 0.5 x 0.416 x 1.25 x 20.0 x $(3.688 - 0.118)^2$
= 66.29 kN/m

Horizontal active force due to water in tension cracks (if present)

p'_a = 0.5 G_w γ_w z_0^2
= 0.5 x 1.00 x 9.81 x 0.118^2
= 0.07 kN/m

Vertical lever arm of horizontal soil load above toe

y_{qh} = $(H – H_c)$/ 3
= (3.688 – 0.118) / 3
= 1.190 m

Vertical lever arm of horizontal water load

y_{qh} = H - 0.666 H_w
= 3.688 - (0.667 x 0.118)
= 3.610 m

Appendix 4
Consideration of the combined bearing and overturning effects

The following example demonstrates the relationship between overturning of a retaining wall about the “one-third base” point (reaction in the middle third) and overturning about the toe.
This example is specific to a height of 3.0 m and an internal friction angle of 30°.

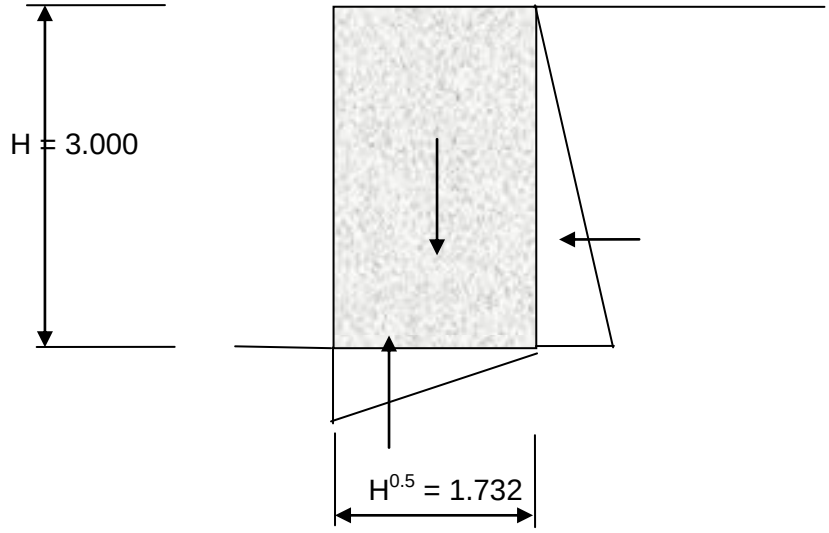

Height of wall
H = 3.000 m

No embedment

Gravity wall density
γ_i = 20 kN/m^3 (i.e. Facing and any confined soil)

Imposed load
q = 0 kPa

Retained soil density
γ_r = 20 kN/m^3

Retained soil friction angle
φ_r = 30°

Retained soil external friction angle
δ_r = 0°

Width of base
B = 1.732 (Note: This is equal to $H^{0.5}$)

Active pressure coefficient,

$$K_a = \frac{\cos^2(\varphi_r + \omega)}{\cos^2\omega\cos(\omega - \delta)[1 + \{\sin(\varphi_r + \delta)\sin(\varphi_r - \beta) / \cos(\omega - \delta)\cos(\omega + \beta)\}^{0.5}]^2}$$

$= (1 - \sin\varphi_r) / (1 + \varphi_r)$ For $\omega = 0$, $\beta = 0$, $\delta = 0$
$= (1 - \sin 30^o) / (1 + \sin 30^o)$
$= 0.333$

Overturning about the "one-third" point
Reaction is within the "middle third of the base" – This is the requirement of Code of Practice No 2.

Overturning Moments
M_O = K_a γ H . H / 2 . H / 3
= 0.333 x 20 x 3.0 x 3.0 x 3.0 / (2 x 3)
= 30.0 kN.m

Restoring Moment
M_R = γ H. $(H)^{0.5}$. $(H)^{0.5}$/6
= 20 x 3.0 x 1.732 x 1.732 / 6
= 30.0 kN.m

i.e. The factor against overturning about the "one-third" point is 1.0.
i.e. Maintaining the reaction within the "middle third" leads to a factor against overturning of 1.0, not 2.0.

Overturning about the "toe"

Overturning Moments
M_O = K_a γ H . H / 2 . H / 3
= 0.333 x 20 x 3.0 x 3.0 x 3.0 / (2 x 3)
= 30.0 kN.m

Restoring Moment
M_R = γ H. $(H)^{0.5}$. $(H)^{0.5}$/3
= 20 x 3.0 x 1.732 x 1.732 / 3
= 60.0 kN.m

i.e. The factor against overturning about the "toe" point is 2.0.
However, this implies an infinite bearing pressure at the toe, which cannot be supported by the foundation (unless it is rock or concrete).

Appendix 5
Extracts from Civil Engineering Code of Practice No 2 (1951) *Earth Retaining Structures,* The Institution of Structural Engineers (UK)

CIVIL ENGINEERING CODE OF PRACTICE
No. 2 (1951)

U.P.C. 624.042.13 : 624.137

EARTH RETAINING STRUCTURES

Civil Engineering Codes of Practice Joint Committee

THE INSTITUTION OF CIVIL ENGINEERS

THE INSTITUTION OF WATER ENGINEERS

THE INSTITUTION OF MUNICIPAL ENGINEERS

THE INSTITUTION OF STRUCTURAL ENGINEERS

Issued on behalf of the Committee by
THE INSTITUTION OF STRUCTURAL ENGINEERS
11 UPPER BELGRAVE STREET, LONDON, S.W.1

Reprinted 1975 — Price £3

(*b*) Allowance must be made for tension cracks, which may extend to a depth of $\frac{2c}{\gamma_s}$ (see clause 1·4332). Where c is the shear strength of the clay at a given depth and γ_s is the saturated density of the soil.

(*c*) When water is present in front of the structure, stability must be calculated for conditions of the lowest possible water level, and an allowance must be made for the softening of clays in this region.

(*d*) The possibility that, in the future, tipping, construction behind the structure or excavation in front may take place, should be considered.

SECTION 1·4. CALCULATIONS OF FORCES ON STRUCTURES

1·41. General. With most gravity walls, cantilever walls, timbering and sheet piling, the yield of the wall is sufficient to develop full shear resistance in the ground behind the wall and the earth pressure will therefore equal the active value; although the pressure may be increased above this value in clays near the surface, due to swelling.

The active pressure itself can be calculated with sufficient accuracy from the wedge theory using a plane slip surface or from algebraic expressions derived from this wedge theory.

With gravity walls, cantilever walls and sheet piling, full wall friction or adhesion may be used in the calculation of active pressure. With strutted timbering or sheet piling which does not penetrate the ground below the bottom of the excavation no wall friction can be allowed, since the timbering is free to move down with the wedge. Even if there is some penetration it is advisable to neglect wall friction since it is known that the plane wedge theory leads to a slight under-estimation of the active pressure on timbering.

With gravity walls and cantilever walls the distribution of active pressure may be taken as varying linearly in any one stratum. The same assumption is permissible for sheet piling although it may be desirable to make corrections to the bending moments and anchor tie pulls in order to allow for the effects of arching in the ground behind the piling. With timbering, the pressure distribution should be taken as trapezoidal.

In calculating active pressures full account of any seepage forces or surcharge loads should be made.

With rigid self-supporting structures retaining earth, such as monolithic concrete tunnels, portal framed bridges and rigid basement walls strutted by means of a heavy raft and floor beams, the yield may be insufficient to mobilise the full shear resistance in the ground and the pressure will approximate to the earth pressure at rest.

The amount of forward movement of the wall that can be tolerated will not always be sufficient to develop the full shear resistance of the ground in front of the wall and in such circumstances the calculation should be based on a reduced value of passive resistance.

The passive resistance can be calculated from the wedge theory, using a curved slip surface, or from the wedge theory using a plane slip surface provided suitable corrections are made to allow for the effect of wall friction. Where applicable, algebraic expressions derived from the curved wedge theory can be used (see clause 1·45).

If the wall can settle appreciably in relation to the ground which is providing the passive resistance, full wall friction may be used in the calculation of passive pressure. In the general case, however, when such settlement is not certain, values of wall friction or adhesion not exceeding one-half the full values should be used.

The distribution of passive resistance may be taken as a linear function of the depth.

In calculating passive resistance full allowance should be made for seepage forces and for any possible future removal of ground in front of the wall.

1·42. Earth pressure at rest.

1·421. GENERAL. Where the yield of a structure is extremely small the full shear strength of the soil may not be fully mobilised and the earth pressure acting on the structure will be greater than the active value but less than the passive value. In this case the pressure to be taken is the value of the earth pressure at rest. In addition, consideration should be given to the pressures due to the swelling of clay (see clause 1·4334).

1·422. INTENSITIES OF VERTICAL AND LATERAL PRESSURES. At any depth z below the ground surface the effective vertical pressure intensity is

$$p_v = \gamma_a z \quad . \quad . \quad . \quad . \quad . \quad . \quad . \quad (1)$$

where γ_a is the average density of all the strata down to the depth z. If ground water is present at a level h_w below the surface of the ground the total vertical pressure intensity is :—

$$p_v + p_w = \gamma_a z + \gamma_w (z - h_w) \quad . \quad . \quad . \quad . \quad . \quad (1a)$$

where p_w is the water pressure at the depth z, γ_w is the density of water, and γ_a is the average density with due allowance for hydrostatic uplift below ground water level.

The lateral pressure intensity at the depth z in undisturbed ground can be expressed in the form

$$p_h = K_o \gamma_a z \quad . \quad . \quad . \quad . \quad . \quad . \quad . \quad (2)$$

where K_o is the coefficient of earth pressure at rest.

If ground water is present at a level h_w below the surface of the ground the lateral pressure intensity is :—

$$p_h + p_w = K_o \gamma_a z + \gamma_w (z - h_w) \quad . \quad . \quad . \quad . \quad . \quad (2a)$$

In sands, K_a may be taken to vary between 0·4 and 0·6. In clays, K_a can be assigned a value only at appreciable depths below the surface; this value being from 0·5 to 0·75 in normally consolidated clays i.e. clays such as recent deposits of estuarine clays which have not in their geological history been subject to loads greater than those at the present time, and of the order unity in over-consolidated clays, such as London and Oxford clays.

1·43. Active pressure.

1·431. GENERAL.

1·4311. *Applicability of calculations.* For calculating the active pressure of cohesionless soils, the methods given in clause 1·432 may be taken as tolerably reliable.

For cohesive soils the methods of calculation are not final. In the design of structures to retain cohesive soils, a suitable addition may be made to the calculated active pressure of the soil in order to provide for uncertainties. Where, as may be the case with the stiffer clays, the total pressure on the wall as calculated according to this Code is small, the value of the total pressure to be assumed for purposes of design should not be less than that found by assuming the horizontal pressure at any depth to be that due to a fluid with a density of 30 lbs. per cu. foot.

The engineer should determine whether to treat any particular soil as cohesive or cohesionless for design purposes according to its physical properties.

1·4312. *Effect of rain storms.* If a wall with a drainage system at the back retains materials of high permeability, such as some medium or coarse sands or gravels, the inflow of water during heavy rain storms will not usually be sufficient to saturate the material of the backing, the water percolating in a predominantly vertical direction down to the level of the drainage outlet. So long as the capacity of the drainage system is sufficient to prevent the ground water level from rising above the level of the soffit of the weep holes or other outlet, the total active thrust on a vertical wall with horizontal ground may be taken as

$$P_a = K_a \gamma_m \frac{H^2}{2} \sec \delta \quad . \quad . \quad . \quad . \quad . \quad (3)$$

where P_a is inclined at an angle δ to the horizontal, δ is the angle of friction between the retained earth and the back of the wall, K_a is the coefficient of active pressure taken from Table 1, H is the vertical height of the earth retained by the wall and foundation and γ_m is the moist density of the soil.

If the material retained is of low permeability, such as fine or silty sand, and a heavy rain storm can establish a flow of water towards the drainage layer, the effect will be to cause an increase in the total active thrust on the back of the wall even when the drainage system is fully capable of discharging any flow that

comes into it. Under these conditions the total active thrust on a vertical wall with horizontal ground may amount to the resultant of :—

$$\left.\begin{array}{l} P_a = K_a \gamma_b \frac{H^2}{2} \sec \delta, \text{ acting at angle } \delta \text{ with the normal,} \\ \qquad \gamma_b \text{ being the submerged density of the soil} \\ \text{and } 0{\cdot}5\, \gamma_w \frac{H^2}{2}, \text{ acting normal to the wall.} \end{array}\right\} \quad . \quad (3a)$$

If, however, in any cohesionless soil the inflow of water exceeds the capacity of the drainage system under the conditions of head mentioned above, the ground water level will rise gradually up the back of the wall until a sufficient head is developed to discharge the whole of the storm water through the existing drainage system. In the limit, ground water level may reach the top of the wall. Under these conditions, or if it is possible for them to arise, the hydraulic pressure normal to the wall should be added to the active thrust due to the submerged backing.

In cohesive soils subject to tension cracks water pressure in such cracks should be allowed for. For this purpose, the depth of the crack should be taken as z_o, the calculated depth of the tension zone, see clauses 1·4332 and 1·4333, or $\frac{H}{2}$ whichever is less. If, however, shrinkage cracks are liable to form to a depth greater than that given above, water pressure should be allowed for the full depth of such shrinkage cracks. The maximum depth of shrinkage cracks varies with the nature of the soil and climatic conditions, but in this country can generally be taken as about 5 ft.

Under any conditions full water pressure must be allowed for below the highest level of the soffit of the weep holes, or of other drainage outlets. Care should be taken in the design, construction and maintenance of the drainage system to see that it does not become choked, since if this occurs there is a danger that the zone of active water pressure will extend upward.

1·4313. *Effect of tidal lag.* In gravel, tidal lag will, in most cases, be negligible. In sands tidal lag will depend on the permeability. With fine or silty sands, and with the normal range of tidal variation, a considerable lag amounting to several feet may be expected to occur between a falling tide and the water level in the sand, even with well-drained walls. With clays and silts, however, it may be necessary to allow full hydrostatic pressure below the highest possible position of ground water level.

1·432. COHESIONLESS SOILS.

1·4321. *Cohesionless soils—vertical wall and horizontal ground.* In the case of dry backing with a density of γ_d the active pressure intensity on a vertical wall at any depth z below the horizontal ground surface is given by the equation :

$$p_a = K_a \gamma_d z \sec \delta \quad . \quad . \quad . \quad . \quad . \quad (4)$$

and the total active pressure is :

$$P_a = K_a \gamma_d \frac{H^2}{2} \sec \delta \quad . \quad . \quad . \quad . \quad . \quad (4a)$$

p_a and P_a are inclined at an angle δ to the normal at the back of the wall.

Where the backing is moist but is above ground water level the moist density γ_m* should be substituted for γ_d in equations (4) and (4a) (see Table 3). The effect of rain and tidal lag should also be considered.

Values of K_a are given in Table 1 for various values of ϕ, the angle of internal friction of the retained earth, and δ the angle of friction between the retained earth and the back of the wall. Intermediate values may be interpolated. These values for K_a are derived from the wedge theory.

A rough guide for the value of ϕ may be obtained from Table 2. A more accurate value may be obtained from shear tests carried out on the material to be used for the backing at a density equal to that at which it will be placed or at which it exists in the ground. Whenever possible, such tests should be carried out in advance of design. Where such tests are not carried out, however, the selection and compaction of the backfilling material should be controlled so that as close an approximation as possible is made in the final construction to the assumptions made in design.

In the absence of definite test data δ may be taken as 20° for walls of concrete or brick, as 30° for steel piling coated with tar or bitumen, and as 15° for uncoated steel piling. Its value is not affected by submergence.

Where the structure or the backing behind it is subjected to continual vibration, δ should be taken as zero. It should also be taken as zero where there may be a tendency for the structure to move downward with the backing material (e.g., in an excavation where the sheeting does not penetrate to any appreciable depth below the bottom).

If the ground water level is at a depth h_w below the surface of the ground, the backing will be waterlogged below this level and its density will be γ_b, the submerged density. Then as well as the active earth pressure p_a acting at an angle δ with the normal, there will also be water pressure p_w acting normal to the wall, the pressure intensity in equation (4) is replaced by the resultant of :—

$$\left.\begin{array}{l} p_a = K_a \gamma_m h_w \sec\delta + K_a \gamma_b (z - h_w) \sec\delta, \text{ acting at angle } \delta \\ \qquad\qquad \text{with the normal} \\ \text{and } p_w = \gamma_w (z - h_w), \text{ acting normal to the wall} \end{array}\right\} \quad (5)$$

Typical values of the densities γ_m and γ_b are given in Table 3 but, if possible, test data should be obtained.

Having determined the values of ϕ, δ and the density, the total thrust on the wall can then be calculated by plotting the pressures against depth and finding the area of the resulting diagram.

* It should be noted that γ_m will vary with the moisture content of the soil.

Table 1

Values of K_a for cohesionless materials, vertical walls with horizontal ground

Values of δ	Values of ϕ				
	25°	30°	35°	40°	45°
	Values of K_a				
0	·41	·33	·27	·22	·17
10°	·37	·31	·25	·20 ·24	·16
20°	·34 ·40	·28 ·70	·23 ·26	·19 ·24	·15 ·16
30°	—	·26 ·32	·21 ·22	·17 ·20	·14 ·16

Revised figures have been calculated by Coulomb formula.

Table 2

Typical values of ϕ for cohesionless materials

Materials	ϕ
Sandy gravel	35°—45°
Compact sand	35°—40°
Loose sand	30°—35°
Shale filling	30°—35°
Rock filling	35°—45°
Ashes or broken brick	35°—45°

Table 3

Densities of cohesionless materials lb./ft.³

Material		Density when drained above Ground Water Level γ_m	Density when submerged below Ground Water Level γ_b
Gravel		17·6 15·5 100—125 19·4	
Coarse and medium sands ...		18·3 16·3 105—130 20·2	60 60—80 1280
Fine and silty sands		19·0 17·1 110—135 21·0	
Rock	granites and shales	15·5 100—130 20·2	60 60—80 1280
	basalts and dolerites...	17·1 110—140 21·7	70 70—100 1600
	limestones and sandstones ..	12·6 80—120 18·6	60 60—80 1280
	chalk	9·3 60—80 12·6	20 20—40 640
Broken brick		10·9 70—110 17·5	60 60—80 960
Ashes		6·2 40—60 9·3	20 20—30 480

Fully saturated density = submerged density + 62·5 lb./ft.³,

$$\gamma_s = \gamma_b + \gamma_w.$$

Worked examples showing the use of Tables 1, 2 and 3 are given in Appendix D.

1·4322. *Cohesionless soils—irregular ground surface or inclined wall.* Where the ground surface is inclined or irregular, or where

Coarse to medium sand 1900 kg/m³

the back of the wall is not vertical, the active pressure can be found by the graphical procedure shown in Fig. 3.

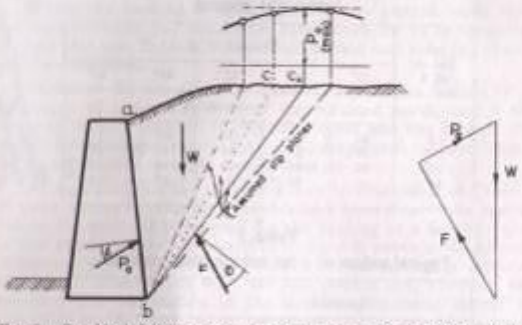

Fig. 3. Graphical determination of active pressure for cohesionless soils, wedge theory.

A slip plane is chosen and the thrust on the wall can then be determined from a triangle of forces. The procedure is repeated with other slip planes until sufficient values have been obtained to enable the maximum thrust to be found by graphical interpolation. Not less than three planes should be used, but it is not usually necessary to have more than five. The position of the centre of pressure on the back of the wall may be taken as the point of intersection with the back of the wall of a line drawn through the centre of gravity of the wedge parallel to the slip plane of the wedge.

Where there is a superimposed line load running a considerable length parallel to the wall, the weight per unit length of this load should be included in the force W in the diagram.

If there are several different strata of cohesionless soils behind the wall the foregoing procedure can be used for the uppermost stratum in contact with the wall, and, unless the wall is appreciably inclined from the vertical, the active pressures exerted by the lower strata can be calculated from the equations of clause 1·4321, using a reasonable average ground surface level for estimating the overburden pressure.

1·433. COHESIVE SOILS.

1·4331. *General.* In cohesive soils three broad types require separate consideration, viz. :—

(a) Non-fissured clays ($\phi = 0$).
(b) Silts and partially saturated clays ($\phi > 0$).
(c) Stiff fissured clays.

With non-fissured clays the principal cause of any change in shear strength with time is that due to consolidation or swelling associated with a change in stress conditions, and consequent changes in water content. But consolidation and swelling are processes requiring considerable time for their completion and with many clays this time may extend over a period of several years. In comparison with such a time scale the period of construction of a retaining wall or cofferdam is so short as to justify the assumption that no water content change takes place. In order to calculate the active pressure exerted by non-fissured clays on a wall, immediately after construction is completed, it may be taken that the soil behaves as a purely cohesive non-frictional material with $\phi = 0$, see clause 1·4332. In addition it is necessary to give consideration to any possible reduction in shear strength which may occur in the course of time due to softening of the clay.

With silts, even when no water content change takes place, and with partially saturated clays, shear strength usually increases with an applied pressure and the soil therefore behaves as a material possessing both cohesion and friction, see clause 1·4333. Here again, any possible future softening must be considered.

With stiff fissured clays experience has shown that the progressive softening is so important as to make any calculation based purely on the original unsoftened strength quite meaningless for design purposes. These clays (such as the London, Weald and Oxford clays) contain a network of fissures and when an opportunity for lateral expansion is provided, as during the construction of a retaining wall, some of these fissures will open up. Water gradually percolates into the open fissures and initiates a softening action which continues for many years and can reduce the shear strength to a small fraction (e.g. one quarter or even less) of its original value. At the present time insufficient data are available to permit general recommendations for design calculations, but the suggested procedure is to use the $\phi = 0$ analysis with an estimated value of the softened strength (see clause 1·4332).

The influence of drainage is to reduce the ground water level. In non-fissured clays this will cause an increase in strength with time, and the worst conditions thus arise immediately after construction of the wall.

In fissured clays and in clay filling the rate of softening is reduced by adequate wall drainage but no quantitative information is available on this point.

Swelling pressures should be considered with all types of cohesive soil in the case of fixed walls but need not be allowed for in the case of free standing walls when, as is normally the case, a very small progressive yield can be tolerated (see clause 1·4334).

Water pressure in tension cracks should also be considered in all types of cohesive soil (see clause 1·4312).

1·4332. *Non-fissured clays ($\phi = 0$). Vertical wall with horizontal ground (see Fig. 4a).*

Active pressure exerted on a vertical wall with horizontal ground, immediately after construction is completed and before any change of water content takes place may be taken as the pressure due to an impervious plastic material of density γ, and is given by the equation :

$$p_{an} = \gamma_s z - 2c\sqrt{1 + \frac{c_w}{c}} \quad . \quad . \quad . \quad . \quad . \quad (6)$$

where γ_s = saturated density of the soil.
z = vertical depth.
c = shear strength or cohesion of the soil at depth z.
c_w = wall adhesion.
p_{an} = horizontal component of active pressure intensity at depth z.

Typical values of c and γ_s for various cohesive soils are given in Table 4.

Where c is less than about 1000 lb/ft² the value of c_w can be taken as equal to c, except in the case of the sheeting of an

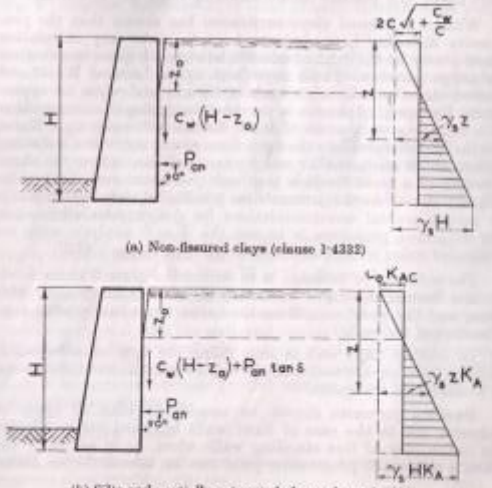

(a) Non-fissured clays (clause 1·4332)

(b) Silts and partially saturated clays (clause 1·4333).

Fig. 4. Diagrams of active pressure, cohesive soils, vertical wall and horizontal ground.

excavation which does not penetrate to any appreciable depth below the bottom. Here c_w should be taken as zero. For clay with c greater than 1000 lb/ft² it is advisable to restrict c_w to this value in the absence of definite test data.

When $c_w = 0$ equation (6) becomes

$$p_{an} = \gamma_s z - 2c \quad . \quad . \quad . \quad . \quad . \quad . \quad (6a)$$

and if $c_w = c$ equation (6) becomes

$$p_{an} = \gamma_s z - 2c\sqrt{2} \quad . \quad . \quad . \quad . \quad . \quad . \quad (6b)$$

The total lateral pressure P_{an} is then equal to the shaded area in Fig. 4(a).

From equation (6) it will be seen that p_{an} is negative for values of z less than

$$z_0 = \frac{2c}{\gamma_s}\sqrt{1 + \frac{c_w}{c}} \quad . \quad . \quad . \quad . \quad . \quad . \quad (7)$$

In all walls and sheeted trenches other than those tied near the top with an anchor, it is advisable to neglect any negative values of p_{an}. This is statically equivalent to assuming that, after a yield of the wall, the clay behind can stand unsupported to this depth z_0 below the surface, or that a tension crack can form in the soil to this depth.

Where a uniform surcharge of intensity w_s exists on the ground surface the depth z_0 must be reckoned from a height h_s above the ground surface where $h_s = \frac{w_s}{\gamma_s}$.

Water pressure will act on the wall in the zone of tension cracks (see clause 1·4312).

When varying strata form the backing to the wall, as in Fig. 6, calculated values of P_{an} may be negative in a layer of stiff clay, even if well below the surface. In effect the lateral pressure from the adjacent strata will produce a gap between the wall and the stiff clay and the possibility of water pressure occurring in this gap should be considered.

Table 4

Typical values of cohesion and saturated density. Cohesive soils

Soil	Cohesion (c) lb/ft²	Saturated density (γ_s) lb/ft³
Very stiff clay	144 > 3000	20·0 (20) 120—140 18·6 – 21·7
Stiff clay ... 72 —	144 1500—3000	
Firm clay ... 36 —	72 750—1500	18·6 (18) 110—130 17·1 – 20·2
Soft clay ... 18 —	36 375—750	17·0 (18) 100—120 15·5 – 18·6
Very soft clay	< 375	

1·4333. *Silts and partially saturated clays ($\phi > 0$) (see Fig. 4b).* Active pressure exerted by silts and other soils possessing both cohesion and friction when tested under conditions of water content change is given by the equation

$$p_{an} = \gamma_s z K_A - c_a K_{AC} \quad . \quad . \quad . \quad . \quad . \quad (8)$$

1 lb/ft² = 0·157 kN/m²
1 lb/in² = 0·0478 kN/m² (kPa)

where

K_A and K_{AC} = coefficients depending upon ϕ, δ and $\frac{c_w}{c_u}$ (see Table 5).

c_u = shear strength at zero normal load.

The horizontal component P_{ac} of the total lateral pressure is then equal to the shaded area in Fig. 4(b).

When $\delta = 0$, equation (8) can be expressed in the form

$$p_{ac} = \gamma_s z \tan^2\left(45 - \frac{\phi}{2}\right) - 2c_u\sqrt{1 + \frac{c_w}{c_u}}\tan\left(45 - \frac{\phi}{2}\right) \quad . \quad . \quad (9)$$

Whilst if both c_w and δ are zero

$$p_{ac} = \gamma_s z \tan^2\left(45 - \frac{\phi}{2}\right) - 2c_u \tan\left(45 - \frac{\phi}{2}\right) \quad . \quad . \quad . \quad (10)$$

Equation (10) will be recognised as Bell's formula.

If the backing is below ground water level at a depth h_w from the top the density below this level will be $\gamma_s = \gamma_s - \gamma_w$ where γ_s is the saturated density given in Table 4 and γ_w is the density of water.

In addition to the earth pressure there will be water pressure p_w.

Equation (8) now becomes

$$p_{ac} + p_w = \left\{\gamma_s h_w + \gamma_s (z - h_w)\right\} K_A - c_u \,.\, K_{AC} + \gamma_w (z - h_w) \quad . \quad . \quad . \quad . \quad (8a)$$

Similarly, equations (9) and (10) become

$$p_{ac} + p_w = \left\{\gamma_s h_w + \gamma_s (z - h_w)\right\} \tan^2\left(45 - \frac{\phi}{2}\right)$$

$$- 2c_u\sqrt{1 + \frac{c_w}{c_u}}\tan\left(45 - \frac{\phi}{2}\right) \quad . \quad . \quad . \quad (9a)$$

$$p_{ac} + p_w = \left\{\gamma_s h_w + \gamma_s (z - h_w)\right\} \tan^2\left(45 - \frac{\phi}{2}\right) - 2c_u \tan\left(45 - \frac{\phi}{2}\right)$$

$$+ \gamma_w (z - h_w) \quad . \quad . \quad . \quad . \quad . \quad . \quad (10a)$$

The questions of wall adhesion and tension cracks do not differ essentially from those considered in clause 1·4332, the depth of the tension zone z_0 being the value of z obtained from equation (8) when $p_{ac} = 0$. The water pressure, however, must be taken as continuous at all depths below ground water level as with cohesionless soils.

There is not sufficient information available to include a table of typical values of c_u and ϕ for silts and other soils possessing both cohesion and friction. It is therefore necessary to obtain these values from tests on these soils.

1·4334. *Change in strength with time in non-fissured clays and silts.* Whenever the pressure is reduced in a clay or silt there is a tendency for softening to take place over a period of years. Thus, if the ground behind a wall has been excavated below its original level, the strength of the clay or silt may decrease with

Table 5

Values of coefficients K_A and K_{AC} for cohesive soils

Coefficient	Values of δ	Values of $\frac{c_w}{c_u}$	Values of ϕ					
			0°	5°	10°	15°	20°	25°
K_A	0	All values	1·00	·83	·70	·59	·48	·40
	ϕ		1·00	·78	·64	·50	·40	·32
K_{AC}	0	0	2·00	1·82	1·68	1·54	1·40	1·29
	0	1	2·83	2·60	2·38	2·16	1·96	1·76
	ϕ	$\frac{1}{2}$	2·45	2·20	1·92	1·66	1·32	1·16
	ϕ	1	2·83	2·47	2·12	1·66	1·69	1·41

NOTE.—When $\phi = 0$, c_u becomes c.

Approximate intermediate values of K_{AC} can be obtained by linear interpolation.

Worked examples showing the use of Table 5 are given in Appendix D.

time. This possibility should be considered although, in most cases, it will not be of great importance with active pressures.

Weathering will, however, take place downwards from the exposed surface of a clay or silt. The zone of weathering in England may extend to a depth of at least 3 ft to 5 ft, and in this zone it is possible in the winter for swelling pressures to develop.

Present knowledge does not allow accurate estimates of these swelling pressures but it is probable that they can equal at least the pressure of the overlying soil at any depth in the zone of weathering, and with some clays they may appreciably exceed the pressure of the overlying soil. The effect may be of importance, particularly with comparatively low walls, but if swelling pressures are anticipated it would not be logical to add them to the effect of water pressure in tension cracks. Allowance should be made for whichever effect produces the greater active pressure.

1·4335. *Stiff fissured clays.* The active earth pressure in fissured clays can be calculated in the same manner as described in 1·4332, but the value of the shear strength should be taken as that of softened clay. At present it is only possible to say that the softened strength for most stiff fissured clays, at twenty to fifty years after excavation, can lie in the range of 300-800 lb/ft². Considerable experience is necessary in the design of earth retaining structures in these clays.

If the wall is prevented from yielding progressively by struts or other means, it is probable that the softening action will be appreciably delayed or even prevented.

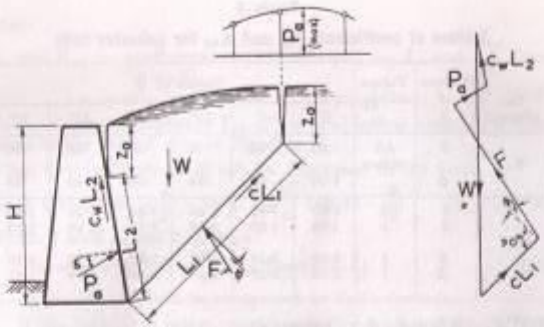

Fig. 5. Graphical determination of active pressure in clay and silt, wedge theory.

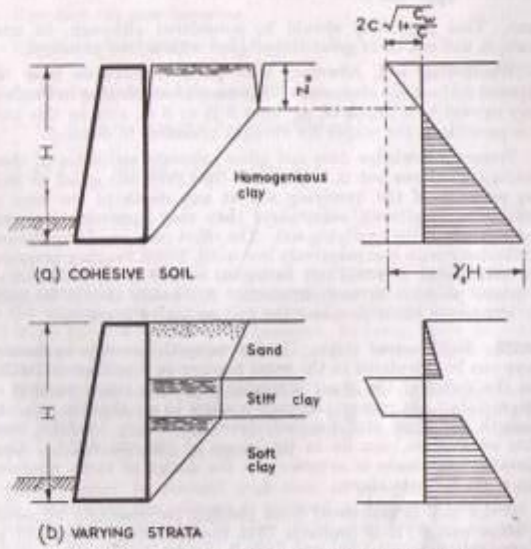

Fig. 6. Diagram of active earth pressure distribution.

1·4336. *Cohesive soils ; irregular ground surface or inclined wall.* With cohesive soils, where the ground surface is irregular the procedure is similar to that described in the section for cohesionless soils. The graphical construction is shown in Fig. 5. The position of the centre of pressure on the back of the wall may be taken as the point of intersection with the back of the wall of a line drawn through the centre of gravity of the wedge parallel to the slip plane of the wedge.

1·434. DISTRIBUTION OF ACTIVE PRESSURE.

1·4341. *Active Pressure—General.* The total thrust should be calculated by the methods given in clause 1·43 and distributed according to the methods given below. Water pressure, however, cannot be redistributed.

1·4342. *Gravity and cantilever walls.* For these walls no redistribution of pressure is required. Typical examples of distribution of pressure due to cohesive soils are given in Fig. 6.

1·4343. *Strutted excavations.* In strutted excavations the total thrust P_a should be calculated with $\delta=0$ and a trapezium of pressure distribution of width $1{\cdot}6\ P_a/H$ plotted as shown in Fig. 7. The total pressure represented by the trapezium is 44 per cent. in excess of the calculated thrust and this allows for any inequality of loading between individual struts. In dense sand it is permissible to reduce the pressure to zero at the lower end of the sheeting, symmetrically with the distribution of pressure at the top.

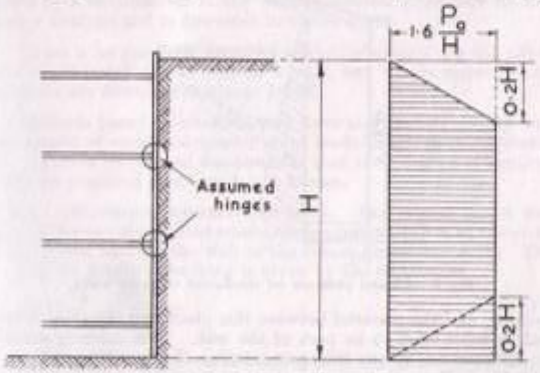

Total area = 1·44 P_a where P_a is the calculated total earth thrust with zero wall friction.

Fig. 7. Conventional pressure distribution on strutted excavation (after Terzaghi).

1·4344. *Anchored sheet pile walls.* The distribution of active pressure in the special case of sheet pile walls is dealt with in clause 1·46.

1·435. LATERAL PRESSURE ON REINFORCED CONCRETE WALLS. In both the cantilever type and the counterforted type of wall the virtual back of the wall is taken to be the vertical plane from the heel or rear extremity of the base to the surface of the earth

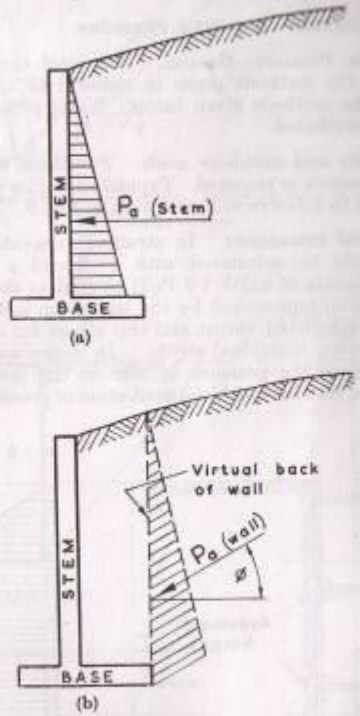

Fig. 8.—Lateral pressure on reinforced concrete walls.

backing, and the material between this plane and the stem of the wall is considered to be part of the wall. This earth is carried on the base and in any tilting or rotation of the wall it will move with the wall.

For the design of the stem of the wall and for the estimation of the forces on the base, the lateral pressure is calculated as acting horizontally with $\delta=0$ as shown in Fig. 8 (a).

When the wall is on the point of failure by sliding or tilting forward, the lateral pressure will act at the virtual back of the wall as shown in Fig. 8 (b), the pressure in this case being calculated as inclined at $\delta=\phi$=angle of internal friction of the backing.

1·44. Lateral pressure due to surcharge.

1·441. GENERAL. The various types of surcharge imposed on a backing may be classified as follows:—

(a) Uniform surcharge consisting of a continuous load on the surface of the backing (e.g. goods stored on quays behind dock walls).

(b) Concentrated surcharge—
  (1) Isolated loads on the backing (e.g., column footings).
  (2) Line loads (e.g., trains running parallel to dock walls).

In conformity with the methods used to determine earth pressure, the lateral pressure due to surcharge is usually calculated on the basis of the wedge theory or some modification of it.

A uniform surcharge consisting of a continuous load on the backing extending beyond the line where the surface of rupture reached ground level may conveniently be replaced by an equivalent height of backing as explained in clause 1·442.

The calculation of the effects of a concentrated line load can be made by a modification of the usual graphical procedure for the wedge analysis and is discussed in clause 1·443.

There is no generally accepted method of calculating the effect of a single isolated load behind a wall, but simple approximate methods are discussed in clause 1·444.

Methods based on elastic theory have also been developed and the results of such analyses for point loads are given in Appendix H. It must be pointed out however that their degree of applicability to practical problems is not known.

1·442. UNIFORMLY DISTRIBUTED LOAD. The lateral thrust due to a uniformly distributed surcharge is assumed to act at the same angle to the back of the wall as the thrust due to the earth. The equivalent height of backing is given by the expression :

$$h_e = \frac{w_s}{\gamma_a} \frac{\sin \alpha}{\sin (\alpha+\beta)} \quad . \quad . \quad . \quad . \quad . \quad . \quad . \quad (11)$$

where

h_e is the height of earth equivalent to the weight of uniformly distributed loading on the retained earth.

w_s is the intensity of surcharge loading per unit area.

α is the angle of inclination of the back of the wall with the horizontal.

β is the angle between the surface of the retained earth and the horizontal.

When the backing has a horizontal surface, $h_s = \frac{p_s}{\gamma_s}$

The intensity of pressure due to surcharge is given by

$$p_s = K_a h_s \gamma_s \qquad (12)$$

where the value of K_a is taken from Table 1. This pressure is uniformly distributed over the back of the wall, so that the centre of pressure is at half the height of the wall.

1·443. LINE LOADS. If the surface of the backfill carries a line load w, per unit length parallel to the crest of the wall, the effect can be calculated by a modification of the graphical procedure for the wedge analysis shown in Figs. 3 and 5.

This involves finding the worst surface of sliding by trial in the usual manner and by assuming that every point on the back of the wall represents the foot of a potential surface of sliding, the point of application of the resultant force and the distribution of pressure can be assessed. For details of the procedure, reference should be made to standard textbooks. (1) (2)

In practice this procedure is somewhat cumbersome and for most practical problems the simple approximate method suggested by Terzaghi (3) and indicated in Fig. 9 will be found to suffice.

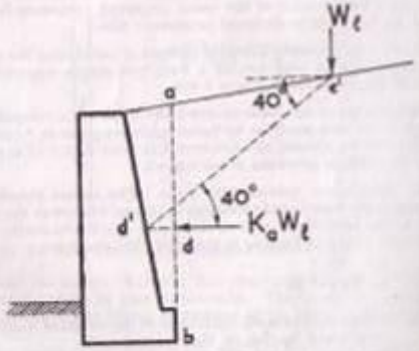

Fig. 8. Method of estimating magnitude and line of action of pressure due to a line load.

The line load w, per unit length can be considered to exert against the vertical section ab a horizontal force equal to $K_a \times w$, per unit length of a wall, using values of K_a given in Tables 1 and 5. The point of application d of this force can be obtained by drawing a straight line c' d' from the centre of the line load c' at an angle of 40° to the horizontal until it intersects the back of the wall at d'. If point d' is located below the base of the wall, the effect of the line load can be disregarded.

1·444. ISOLATED LOADS. The wedge theory cannot be applied to the consideration of the effect of isolated loads because it does not take into account the spreading of the load through the backing.

The elastic theory (Appendix H) gives results which are often on the conservative side but does not take into account the shear properties of the backing material.

A commonly used approximate method is to assume that the load is spread through the backing at an angle of dispersion of 45° on each side of the load. The lateral pressure at any point due to the surcharge is then taken as K_a times the vertical pressure at the point. This method, however, tends to give results on the unsafe side.

The following tentative approximate method is suggested. The line of action of the resultant force is obtained by a construction similar to that for a line load (Fig. 9), the 40° line being constructed from the centre of the loaded area. It is assumed that, if the length of the loaded area be L and the distance between the back of the wall and the near edge of that area be x, the resultant lateral thrust will be distributed along a length of wall equal to L + x. Then, if W, be the load on the area, the resultant thrust per unit length of wall will be $K_a \frac{W_\ell}{L + x}$.

1·45. Passive resistance.

1·451. GENERAL. Where the wall is vertical and the ground surface in front of the wall is horizontal, the passive pressure may be estimated directly by the method given in clauses 1·452 and 1·453. No redistribution of pressure is necessary.

Where the wall is inclined to the vertical, or if the ground surface in front of the wall is not horizontal, the passive pressure should be obtained by means of the ϕ circle or logarithmic spiral

(1) Terzaghi and Peck "Soil Mechanics in Engineering Practice," Arts. 24 and 27, Pp. 128 and 136.
(2) Terzaghi "Theoretical Soil Mechanics," Art. 38, p. 91.
(3) Terzaghi and Peck "Soil Mechanics in Engineering Practice," Art. 46, p. 211.

method of graphical analysis, as described by Terzaghi in "Theoretical Soil Mechanics."

1·452. COHESIONLESS SOILS, VERTICAL WALL AND HORIZONTAL GROUND. The intensity of passive resistance to a vertical wall at any depth d below the horizontal ground surface in front of the wall is given by the equation

$$p_p = K_p \gamma_d d \sec \delta \quad . \quad . \quad . \quad . \quad . \quad . \quad (13)$$

and the total passive resistance by

$$P_p = K_p \gamma_d \frac{D^2}{2} \sec \delta \quad . \quad . \quad . \quad . \quad . \quad . \quad (14)$$

where

D = depth of earth in front of the wall and foundation,
and
K_p = coefficient of passive resistance (see Table 6).

In soil which is moist but above ground water level, the density γ_m should be substituted for γ_d in equations (13 and 14) (see Table 3).

For waterlogged material where d_w is the depth of water above ground surface the pressure intensity in equation (13) is replaced by the resultant of

$$\left.\begin{array}{l} p_p = K_p \gamma_b d \sec \delta, \text{ acting at angle } \delta \text{ with the normal} \\ \text{and} \\ p_w = \gamma_w (d+d_w), \text{ acting normal to the wall} \end{array}\right\} (13a)$$

Alternatively the horizontal passive resistance can be calculated from the equation

$$p_{pa} + p_w = K_p \gamma_b d + \gamma_w (d+d_w) \quad . \quad . \quad . \quad . \quad . \quad (13b)$$

and the wall friction which acts upwards on the wall can be calculated from the expression $p_{pa} \tan \delta$.

Where the ground water level is at a depth d_{gw} below the ground surface, then

$$\left.\begin{array}{l} p_p = K_p \gamma_m d_{gw} \sec \delta + K_p \gamma_b (d - d_{gw}) \sec \delta \\ \text{and} \\ p_w = \gamma_w (d - d_{gw}) \end{array}\right\} \quad . \quad . \quad . \quad (13c)$$

Values of K_p are given in Table 6 for various particular values of ϕ and δ. Intermediate values can be found with sufficient accuracy by linear interpolation.

A rough guide to the value of ϕ, the angle of internal friction, may be obtained from Table 2. A more accurate determination may be obtained from shear tests carried out on the soil at a density equal to that at which it will be placed or at which it exists in the natural ground, whichever is less. Whenever possible such tests should be carried out. The value of ϕ is not affected by submergence.

The angle of wall friction, in the general case, should be taken at only one-half the values given in clause 1·4321 for active pressures. The full values given in that clause may be used where

the wall tends to move downwards in relation to the ground, as may be the case with sheet pile walls that are not 'fixed' (see clause 4·32). Wall friction exceeding the weight of the anchorage should be neglected in calculating the resistance of anchor piles or beams.

Some values for the density of materials are given in Table 3.

Having determined the values of ϕ, δ and γ, the total passive resistance can then be calculated by plotting the pressures against depth. Moreover, this will give the pressure distribution to be used in design.

Table 6

Values for K_p for cohesionless soils, vertical walls and horizontal ground

Values of δ	Values of ϕ			
	25°	30°	35°	40°
	Values of K_p			
0°	2·5	3·0	3·7	4·6
10°	3·1	4·0	4·8	6·5
20°	3·7	4·9	6·0	8·8
30°	—	5·8	7·3	11·4

1·453. COHESIVE SOILS, VERTICAL WALL AND HORIZONTAL GROUND.

1·4531. *General.* As with active pressure, three types of soil require separate consideration, viz. :—

(a) Non-fissured clays ;
(b) Silts and partially saturated clays ;
(c) Stiff fissured clays.

1·4532. *Non-fissured clays* (ϕ=0). The horizontal passive resistance to a vertical wall at any depth d below the horizontal ground surface in front of the wall is given by the equation

$$p_{pa} = \gamma_s d + K_{pc} c \quad . \quad . \quad . \quad . \quad . \quad . \quad . \quad . \quad (15)$$

where

c = shear strength or cohesion of the soil at depth d ;
γ_s = saturated density;
K_{pc} = coefficient, values of which are given in Table 7.

The values of c_w should, in the general case, be taken as c/2 for clays with c less than 1000 lb/ft² whilst for clays with c greater than 1000 lb/ft², c_w should be taken as 500 lb/ft².

Where the wall tends to move downwards in relation to the ground, the value of c_w may be taken as equal to c but not exceeding 1000 lb/ft² (see clause 1·4332).

Typical values of c and γ_s are given in Table 4.

Part 4
Sample Screens

Notes:

1. This appendix sets out some sample screens from the software.

2. The screens shown here are:
    - Retaining Wall Design - Loads, Geometry & Factors
    - Reinforced Soil Structures
    - Segmental Gravity Walls
    - Reinforced Concrete Masonry Cantilever Gravity Retaining Wall

3. Not all screens are shown.

4. The numbers in the sample are intended to give an indication of the type of calculations performed, but not the values on any particular design.

5. The intent is to display the scope of the software.

Retaining Wall Design - Loads, Geometry & Factors

CLIENT, PROJECT & DESIGN ORGANISATION

Client Organisation				
Contact Name				
Phone				
Fax				
Email				
Project & Description				
Retaining Wall Designation				
Date				
Design organisation				
Design Engineer				

EXPOSED HEIGHT OF RETAINING WALL

Exposed Height of Reinforced Soils Structures			3,000	**3000**
Exposed Height of Segmental Gravity Walls			0	
Exposed Height of Reinforced Cantilever Gravity Walls			0	

DESIGN STANDARD			AS 4678	
Load Case			Ultimate	
Load Case			U (i)	

STRUCTURE CLASSIFICATION & PROXIMITY OF OTHER STRUCTURES FOR LOW PROBABILITY OF DAMAGE

Angle to top limit for mobile (live) load	$\theta\ t_m$	^{o}	69.0	
Angle to top limit for fixed (dead) load	$\theta\ t_f$	^{o}	53.4	
Angle to base limit	$\theta\ b$	^{o}	53.4	
Top limit for mobile (live) load		mm	1,149	
Top limit for fixed (dead) load		mm	2,226	
Base limit		mm	2,226	
Proximity to top limit for mobile (live) load		mm	Input	
Proximity to top limit for fixed (dead) load		mm	Input	
Proximity to base limit		mm	Input	
Is load within the to top limit for mobile (live) load ?				
Is load within the top limit for fixed (dead) load ?				
Is load within the base limit ?				

Probable structure classification, based on proximity			B	
		Structure Classification B - Failure results in moderate damage & loss of service	B	

EMBANKMENT GEOMETRY

Height of exposed stem	H_1	mm	**3,000**	
Slope of retaining wall (measured from vertical)	ω	^{o}	1.43	
Slope of retained soil close to retaining wall (measured from	β_1	^{o}	**1.43**	

horizontal)			
Slope of retained soil at distance from retaining wall (measured from horizontal)	β_2	^{o}	1.43
Length of slope at wall	L_{slope1}	mm	1,500
Length of slope at distance behind wall	L_{slope2}	mm	740
Height of slope at wall	H_{slope1}	mm	38
Height of slope at distance behind wall	H_{slope2}	mm	19
Effective backfill slope	β'	^{o}	1.4
Is water table present? (y/n)			**n**
Height of water table in front of wall (from soil surface at toe)	$H_{w\ front}$	mm	
Height of water table behind wall (from soil surface at toe)	$H_{w\ rear}$	mm	
Factor against slip of the backfill at wall (Ultimate analysis)			13.08
Factor against slip of the backfill at distance behind wall (Ultimate analysis)			13.08
Factor against slip of the backfill effecive slope (Ultimate analysis)			13.08

FENCES OR BARRIERS

Is there a fence or barrier on top of the wall? (y/n)			n
Height of fence or barrier	$H_{barrier}$	mm	0

ENVIRONMENTAL CONDITIONS

Ambient temperature at surface	T	^oC	30

LOADS

Dead load vertical surcharge	q_d	kPa	0.0
Live load vertical surcharge	q_l	kPa	**5.0**
Wind vertical surcharge	q_w	kPa	0.0
Earthquake vertical surcharge	q_e	kPa	0.0
Dead vertical line load	D_v	kN/m	0.0
Live vertical line load	L_v	kN/m	0.0
Dead horizontal line load	D_H	kN/m	0.0
Live horizontal line load	L_H	kN/m	0.0
Wind horizontal line load	W_H	kN/m	3.0
Earthquake horizontal line load	E_H	kN/m	0.0

POSITION OF LINE LOADS (Measured from ground level in front of embankment)

Height of horizontal line dead load	y_{DH}	mm	3,000
Height of horizontal line live load	y_{LH}	mm	3,000
Height of horizontal line wind load	y_{WH}	mm	3,000
Height of horizontal line earthquake load	y_{EH}	mm	3,000
Horiz lever arm to vertical line dead load	x_{DV}	mm	100
Horiz lever arm of vertical line live load	x_{LV}	mm	100

PERFORMANCE AND ENVIRONMENTAL REQUIREMENTS

Service life	Y_{serv}	years	60

EARTHQUAKE CONSIDERATIONS

Is earthquake included in the load case analysed?			No
Location			Sydney
Acceleration coefficient	a	-	0.08
Site factor	S	-	1.0
Local acceleration	aS	-	0.08
Earthquake design category	C_{eq}		Ber
Earthquake treatment			Normal

Factors for use with Mononobe-Okabe Pseudo-Static Analysis For Earthquake Loads

Is a pseudo-static analysis required? (Yes / No)			Earthquake not considered
Is a pseudo-static analysis to be performed? (Yes / No)			Earthquake not considered
Acceleration coefficient	a	-	0.08
Nominal horizontal acceleration	a_h k_h	m/s	0.04
Nominal vertical acceleration	a_v k_v	m/s	0.00
Average amplified horizontal acceleration within the retained soil	a_{mh} a_{ih}	m/s	0.056
Average amplified vertical acceleration within the retained soil	a_{mv} a_{iv}	m/s	0.000
Horizontal seismic coefficient	k_h	-	0.056
Vertical seismic coefficient	k_v	-	0.0
Earthquake factors	q	o	0.0

PARTIAL FACTORS ON LOADS

Live load combination factor for strength	ψ_c		0.6
Short term live load combination factor for serviceability	ψ_s		0.6
Long term live load combination factor for serviceability	ψ_l		0.6

Design Standard & Load Case			AS 4678 Ultimate U (i)
Factor on overturning (active) soil loads	G_{dos}	-	1.25
Factor on overturning dead loads	G_{do}	-	1.25
Factor on overturning live loads	G_{lo}	-	1.50
Factor on overturning wind loads	G_{wo}	-	0.00
Factor on overturning earthquake loads	G_{eo}	-	0.00
Factor on resisting soil loads (passive & adhesion)	G_{drs}	-	0.80
Factor on resisting dead loads	G_{dr}	-	0.80
Factor on resisting live loads (eg over infill material)	G_{lr}	-	0.00
Factor on water in tension cracks and groundwater	G_v	-	1.00

PARTIAL FACTORS ON SOIL PROPERTIES

Partial factors on tan(phi)	$\Phi_{\tan(\phi)}$		
Partial factor for Class 1 controlled fill		-	0.95
Partial factor for Class 2 controlled fill		-	0.90
Partial factor for uncontrolled fill		-	0.75
Partial factor for in-situ natural soil		-	0.85

Partial factor for retained & infill soil (RTA only)		-	0.00	
Partial factors on cohesion	Φ_c			
Partial factor for Class 1 controlled fill		-	0.90	
Partial factor for Class 2 controlled fill		-	0.75	
Partial factor for uncontrolled fill		-	0.50	
Partial factor for in-situ natural soil		-	0.70	
PARTIAL FACTORS ON STABILITY				
Required factor against stem overturning			1.00	
Required factor against stem sliding			1.00	
Required factor against base overturning			1.00	
Required factor against bearing failure			1.00	
Required factor against sliding			1.00	
PARTIAL STRUCTURE CLASSIFICATION FACTOR				
Structure classification factor	Φ_n	-	1.00	
PARTIAL FACTORS ON GEOGRID STRENGTH			Fortrac 35/20-20	
		AS 4678 App K	30.00	
		Default values	60.00	
Geogrid type		Polyester	Polyester	
Minimum (m) or characteristic (c)		m	0.00	
Duration of test	hours	100,000	105,120	
Log cycles of extrapolation (0, 1, 2)		0.70	1.65	
Backfill type (F = fine sand, C = coarse gravel)		F	65.0	
Product uncertainty factor	Φ_{up}	1.00	1.00	
Creep reduction factor	Φ_{rc}	0.56	0.62	
Extrapolation uncertainty factor	Φ_{ue}	1.00	0.84	
Construction damage factor	Φ_{ri}	0.85	0.84	
Thickness reduction factor	Φ_{rt}	1.00	1.00	
Strength reduction factor	Φ_{rs}	0.70	1.00	
Temperature reduction factor	Φ_{rst}	1.00	1.00	
Degradation factor (AS 4678 nominates 0.8 for all materials)	Φ_{ud}	0.80	0.80	
Global factor (if the above factors have been lumped together)	Φ_g	1.00	1.00	
Ratio of Actual grid factor / AS 4678 factor	AS 4678	Fortrac 35/20-20		
1.32	0.27	0.35		
PARTIAL FACTORS ON SOIL/GEOGRID INTERACTION				
Sliding uncertainty factor	Φ_{uslide}	-	0.80	
Pullout uncertainty factor	Φ_{upull}	-	0.80	
Coefficient of sliding resistance	k_{slide}	-	0.95	
Coefficient of pullout resistance	k_{pull}	-	0.70	
PARTIAL FACTORS ON GEOGRID CONNECTION				
Connection uncertainty factor	Φ_{ucon}	-	0.75	
SOIL PROPERTIES				
Check of friction angle for cohesionless siliceous sands and gravels				
Angularity		-	s	
Grading		-	M	

Standard penetration test result	N'	-	10.00
	k_A	-	2
	k_B	-	2
	k_C	-	0
Effective friction angle	ϕ'	^{o}	34

FOUNDATION SOIL

Foundation control of fill			**I**
Foundation sliding resistance coefficient of foundation soil	$C_{ds\,f}$	-	**1.0**
Foundation partial factors on tan(ϕ)	$\Phi_{\tan(\phi)}$		0.85
Foundation partial factors on cohesion, c	Φ_c		0.70
Foundation characteristic soil density	γ^*_f	kN/m^3	20.0
Foundation characteristic internal friction angle	ϕ_f	^{o}	30.0
Foundation characteristic cohesion	c_f	kPa	**0.0**
Foundation design internal friction angle	ϕ^*_f	^{o}	26.1
Foundation design cohesion	c^*_f	kPa	0.0
Is base adhesion assumed to be zero? (y/n)			n
Foundation concrete/soil adhesion	c^*_{adh}	kPa	0.0
Foundation external friction angle	δ_f	^{o}	17.4
Foundation horiz active pressure coefficient	K_a	-	0.341
Foundation horiz passive pressure coefficient	K_p	-	2.575
Foundation nominated <u>ultimate</u> bearing strength	$q^*_{ult\,cap}$	kPa	260
Foundation nominated <u>working</u> bearing strength	$q^*_{work\,cap}$	kPa	200
Is cohesion assumed to be zero for sliding resistance? (y/n)			y

INFILL SOIL

Infill control of fill			**C2**
Infill partial factors on tan(ϕ)	$\Phi_{\tan(\phi)}$		0.90
Infill partial factors on cohesion, c	Φ_c		0.75
Infill chacteristic soil density	γ^*_I	kN/m^3	20.0
Infill characteristic internal friction angle	ϕ_I	^{o}	32.0
Infill characteristic cohesion	c_I	kPa	0.0
Infill design internal friction angle	ϕ^*_I	^{o}	29.4
Infill design cohesion	c^*_I	kPa	0.0
Is base adhesion assumed to be zero? (y/n)			**y**
Infill concrete/soil adhesion	c^*_{adh}	kPa	0.0
Infill external friction angle	δ_I	^{o}	19.6
Orientation of failure plane (from horizntal)	α_{ii}	^{o}	54.7

RETAINED SOIL

Retained soil control of fill			**I**
Retained soil partial factors on tan(ϕ)	$\Phi_{\tan(\phi)}$		0.85
Retained soil partial factors on cohesion, c	Φ_c		0.70
Retained soil chacteristic soil density	γ^*_r	kN/m^3	20.0
Retained soil characteristic internal friction angle	ϕ_r	^{o}	30.0
Retained soil characteristic cohesion	c_r	kPa	**0.0**
Retained soil design internal friction angle	ϕ^*_r	^{o}	26.1
Retained soil design cohesion	c^*_r	kPa	0.0
Retained soil external friction angle (to concrete interface)	δ_r	^{o}	26.1

Retained soil external friction angle (to infill soil interface)	$\delta_{r\ (soil)}$	^{o}	26.1	
Orientation of failure plane	α_{ii}	^{o}	51.1	

BEARING PAD MATERIAL

Bearing pad control of fill			C1	
5% cement-stabilised crushed rock, WET when blocks laid, min strength f'c	5.0		10	
Sliding resistance coefficient of levelling pad to other soil	$C_{ds\ b}$	-	1.0	
Sliding resistance coefficient of levelling pad to smooth masonry	μ_b	-	0.68	
Bearing pad partial factors on tan(ϕ)	$\Phi_{tan(\phi)\ b}$		0.95	
Bearing pad partial factors on cohesion, c	$\Phi_{c\ b}$		0.90	
Bearing pad chacteristic soil density	γ^*_b	kN/m^3	20.0	
Bearing pad characteristic internal friction angle	ϕ_b	^{o}	40.0	
Bearing pad characteristic cohesion	c_b	kPa	10.0	
Is base adhesion assumed to be zero? (y/n)			y	
Bearing pad concrete/soil adhesion	$c^*_{adh\ b}$	kPa	0.0	
Bearing pad design internal friction angle	ϕ^*_b	^{o}	38.6	
Bearing pad design cohesion	c^*_b	kPa	0.0	
Bearing pad external friction angle	δ_b	^{o}	25.7	
Bearing pad horiz passive pressure coefficient	K_{pb}	-	2.65	
Nominated maximum ultimate bearing strength	$q^*_{ult\ cap\ b}$	kPa	3,800	

Reinforced Soil Structures

Client Organisation			
Contact Name			
Is base friction required ?	y/n		y
Is base adhesion required ?	y/n		n
Is passive resistance required ?	y/n		n
Structure Classification	-	-	2
Backfill slope at wall	β_1	o	1.4
Backfill slope at distance behind wall	β_2	o	1.4
Embankment slope	ω	o	1.43
Length of slope at wall	$L_{slope\ 1}$	mm	1,500
Length of slope at distance behind wall	$L_{slope\ 2}$	mm	740
Dead load vertical surcharge	q_d	kPa	0.0
Live load vertical surcharge	q_l	kPa	5.0
Wind vertical surcharge	q_w	kPa	0.0
Earthquake vertical surcharge	q_e	kPa	0.0
Wind horizontal line load	W_H	kN/m	3.0
Earthquake horizontal line load	E_H	kN/m	0.0
Vertical line dead load	D_v	kN/m	0.0
Vertical line live load	L_v	kN/m	0.0
Height of horizontal line wind load	y_{WH}	mm	0
Height of horizontal line earthquake load	y_{EH}	mm	0
Horiz lever arm to vertical line dead load	x_{DV}	mm	0
Horiz lever arm of vertical line live load	x_{LV}	mm	0
Minimum geogrid length for low walls	$L_{min'}$	mm	0
Minimum geogrid length / Total height	L_{min}/H		0.70
Extra geogrid length to be specified	L_{extra}	mm	0
Extra geogrid length beyond failure plane	L"	mm	300
Wall embedment	H_{emb}	mm	200
Total wall height	H	mm	**3,200**
Suggested trial geogrid total length	L_{min}	mm	2,240
Base geogrid total length	L	mm	**2,240**
Additional over trial length	L_{add}	mm	0
Total height of exposed stem	H_1	mm	**3,000**
Live load surcharge	q_l	kPa	5.0
Backfill slope (0.01=level, 9.46=1:6, 14.04=1:4)			1.43
Foundation friction angle			30.0
Retained soil friction angle			30.0
Infill friction angle			32.0
Length of slope at distance behind wall			740
Geogrid global factor F			1.00
Is the reinforced soil block effectively drained? (y/n)			y
Is the vertical component of active soil pressure considered? (y/n)			**y**
Is soil friction vert component load factor same as horiz? (y/n)		y/n	**y**
What proportion of potential facing/soil friction resistance		%	100%

is effective?			
Is base friction required ?		y/n	y
Is base adhesion required ? Bearing pad must have cohesion.		y/n	n
Is passive resistance required ?		y/n	n
Is there sufficient sliding resistance of bearing pad?	OK	OK	
Is there sufficient overturning resistance	OK	OK	
Is there sufficient bearing capacity? (Bearing pad on foundation)	OK	OK	
Is there sufficient bearing strength?	OK	OK	
Total horizontal active force	P_H	kN/m	
Total vertical weight	P_V	kN/m	
Bearing effective width (Meyerhoff)	L_B	m	
Required bearing strength at ultimate loads (vertical loads only)	q_{ult}	kPa	
Foundation soil cohesion	c_f	kPa	**0**
GEOGRID SPACING - Grid No 9		Units from grid below	
Grid No 8		Units from grid below	
Grid No 7		Units from grid below	
Grid No 6		Units from grid below	
Grid No 5		Units from grid below	
Grid No 4		Units from grid below	
Grid No 3		Units from grid below	
Grid No 2		Units from grid below	
Grid No 1		Units from base	
GEOGRID TYPE Grid No 9 - Type			
Grid No 8 - Type			
Grid No 7 - Type			
Grid No 6 - Type			
Grid No 5 - Type			
Grid No 4 - Type			
Grid No 3 - Type			
Grid No 2 - Type			
Grid No 1 - Type			
FACING DETAILS			
Angle of layback	ω	^{o}	1.4
Brand of block			CMAA
Designation			Generic
Proportion cores			57%
Normal setback	Ω	^{o}	1.43
Density of infill concrete	γ_{conc}	kg/m^3	1,800
Density of fill within the unit	γ_{fill}	kg/m^3	1,800
Proportion of filled cores	p	%	0%
Mass of concrete behind the unit	M_c	kg	0.0
Mass of one unit	M_u	kg	35.0
Mass of fill within the unit	M_s	kg	18.0
Height of one unit	H_u	mm	200
Length of one unit	L_u	mm	450

Width of one unit	W_u	mm	300
Total width	W_{uc}	mm	300
Is the base of the facing smooth or rough? (s/r)			r
Normal maximum height at the normal angle of layback			900
Position of centre of gravity of unit + soil	G_u	mm	0
Spacing of units	S_u	mm	0
Mass of one unit and infill soil	M_{s+u}	kg	53.0
Density of facing	γ_{s+u}	kN/m^3	19.3
Density of drainage fill		kN/m^3	18.0
Density of facing / Density of drainiage fill		-	1.04
Is the density of the facing within 25% of drainage fill density		-	OK

SLOPE & EMBEDMENT

Embankment slope	ω_e	o	1.43
Wall slope	Ω	o	1.43
Slope of drainage/foundation interface	α	o	0
Is there a geogrid at the base of the wall (y,n)	-	-	n
Specified wall clear height/Minimum wall embedment	$H'/H_{emb\ min}$	mm	20
Minimum wall embedment	$H_{emb\ min}$	mm	150
Wall embedment	H_{emb}	mm	200
Is wall embedment sufficient			OK

STRUCTURAL BEARING PAD

Bearing pad (road base/cement stabilised/reinforced concrete (rb/cs/rc/nil)			rb
Bearing pad material			Compacted road base
Bearing pad thickness	H_{bp}	mm	200
Bearing pad effective width (ie minimum width)	L_{bp}	mm	2468
Actual bearing pad width	$L_{bp\ act}$	mm	2468
Toe dimension of bearing pad	$L_{bp\ t}$	mm	200
Depth to underside of bearing pad	H_{emb+bp}	mm	400

SUMMARY

Total height	H	mm	3200
Geogrid length in fill at top of wall	L'	mm	1940
Geogrid length increase due to backfill slope	L''	mm	1
Geogrid length at top of backfill slope	L_b	mm	1941
Height from top of wall to top of slope	h	mm	49
Total height of exposed stem	H_1	mm	3000
Backfill slope at wall	β_1	o	1.43
Backfill slope at distance behind wall	β_2	o	1.43
Embankment slope	ω_e	o	1.43
Length of slope at wall	$L_{slope\ 1}$	mm	1500
Length of slope at distance behind wall	$L_{slope\ 2}$	mm	740
Orientation of failure plane	a_{ii}	o	54.7
Height of one unit	H_u	mm	200
Width of one unit	W_u	mm	300

Reinforced Soils Design Calculations

INFILL SOIL

Horiz active pressure coefficient	K_{ai}	-	0.300
Orientation of failure plane	α_{ii}	^{o}	54.7

RETAINED SOIL

Horiz active pressure coefficient	K_{ar}	-	0.337
Orientation of failure plane	α_{ii}	^{o}	51.1

WALL GEOMETRY

Wall clear height/Minimum wall embedment	$H'/H_{emb\ min}$	mm	20
Minimum wall embedment	$H_{emb\ min}$	mm	150
Wall embedment	H_{emb}	mm	200
Is wall embedment sufficient			OK
Minimum geogrid length / Total height	L_{min}/H		0.70
Length of fill at top of wall	L'	mm	1940
Length increase due to backfill slope	L''	mm	1
Length at top of backfill slope	L_b	mm	1941
Height from top of wall to top of slope	h	mm	49
Slope of bearing pad/foundation interface	α	^{o}	0
Slope of bearing pad/foundation interface	α	radians	0.000

GEOGRID PROPERTIES

Geogrid designation			a
Unit supplier			Baines Masonary
Unit type			Tasman
Geogrid type			Fortrac 35/20-20
Geogrid type			Polyester
Ultimate tensile strength of geogrid	T_u	kN/m	35.0
Design tensile strength of geogrid	T^*_d	kN/m	12.2
Long Term Design Strength (RTA)	T^*_{LTDS}	kN/m	0.0

(RTA)

Connection Strength			
Connection strength (intercept at no vertical load)	a_c	kN/m	8.4
Friction angle for connection strength	l_c	o	12.0
Maximum connection strength	$S_{c\ max}$	kN/m	14.7
Interface Shear Strength			
Interface shear strength (intercept at no vertical load)	a_u	kN/m	9.6
Friction angle for interface shear strength	l_u	o	34.0
Maximum interface shear strength	$S_{u\ max}$	kN/m	31.6
EXTERNAL STABILITY			Min Vert Load
Horizontal force due to water in front of wall	$P_{w\ front}$	kN/m	0.0
Horizontal force due to water behind infill	$P_{w\ rear}$	kN/m	0.0
Horizontal active force due to surcharge	$P_{q\ H}$	kN/m	7.4
Horizontal active force due to soil	$P_{s\ H}$	kN/m	40.3
Horizontal force due to dead line load at top	$P_{D\ H}$	kN/m	0.0
Horizontal force due to live line load at top	$P_{L\ H}$	kN/m	0.0
Horizontal force due to wind line load at top	$P_{w\ H}$	kN/m	0.0
Horizontal force due to earthquake line load at top	$P_{w\ H}$	kN/m	0.0
Total horizontal active force	P_H	kN/m	47.8
Vertical lever arm of water in front of wall	$y_{w\ front}$	m	0.000
Vertical lever arm of water behind wall	$y_{w\ front}$	m	0.000
Vertical lever arm of horizontal surcharge load above toe	y_{qh}	m	1.624
Vertical lever arm of horizontal soil load above toe	y_{qh}	m	1.083
Vertical lever arm of dead line loads above toe	y_{Dh}	m	3.200
Vertical lever arm of live line loads above toe	y_{Lh}	m	3.200
Vertical lever arm of wind line loads above toe	y_{eh}	m	3.200
Vertical lever arm of earthquake line loads above toe	y_{eh}	m	3.200
Vertical weight of surcharge	$P_{q\ V}$	kN/m	0.0
Vertical line dead load	P_{Dv}	kN/m	0.0
Vertical line live load	P_{Lv}	kN/m	0.0
Vertical weight of soil up to top of wall	$P_{s1\ V}$	kN/m	114.7
Vertical weight of triangular soil above top	$P_{s2\ V}$	kN/m	0.8
Vertical component of surcharge load	$P_{q\ V}$	kN/m	3.43
Vertical component of soil load	$P_{s\ V}$	kN/m	18.6
Vertical uplift of wate pressure under base	$P_{w\ V}$	kN/m	0.0
Total vertical weight	P_v	kN/m	137.4
Horiz lever arm from toe of vertical surcharge load	y_{qv}	m	1.271
Horiz lever arm to vertical line dead load	x_{DV}	mm	0.100
Horiz lever arm of vertical line live load	x_{LV}	mm	0.100
Horiz lever arm from toe of vertical load of soil up to top	y_{s1v}	m	1.160
Horiz lever arm from toe vertical load of soil triangle above wall	y_{s2v}	m	1.674
Horizontal lever arm for vertical surcharge load	x_{qv}	m	2.281

on retained soil			
Horizontal lever arm for vertical retained soil load	x_{sv}	m	2.268
Horiz lever arm from toe water uplift under base	$y_{w\,v}$	m	1.100

Base Sliding

Sliding resistance coefficient of backfill at base	$C_{ds\,i}$	-	1.0
Sliding friction resistance of infill soil	R_{si}	kN/m	77.3
Sliding friction resistance of levelling pad	R_{sd}	kN/m	109.5
Sliding friction resistance of foundation soil	R_{sf}	kN/m	67.4
Base adhesion of structure on bearing pad	P_{ba}	KN/m	0.0
Resisting passive earth pressure on structure	P_{pH}	KN/m	0.00
Vertical lever arm of passive resistance	y_p	m	0.067
Minimum sliding resistance	R_s	kN/m	67.4
Sliding force	P_{aH}	kN/m	47.8
Is there sufficient sliding resistance of bearing pad?			OK
Factor against sliding failure			1.41

Overturning about toe

Resistance moment	M_r	kNm/m	184.2
Overturning moment	M_o	kNm/m	55.8
Is there sufficient overturning resistance			OK
Factor against overturning failure			3.30

Bearing of bearing pad on foundation			Min Vert Load
Total horizontal active force	P_H	kN/m	47.8
Total vertical weight	P_v	kN/m	137.4
Horizontal loads / vertical loads	P_H/P_v	-	0.348
Eccentricity	e	m	0.186
Bearing effective width (Meyerhoff)	L_B	m	1.869
Is reaction within the footprint of the stem?			OK
Effective bearing width at underside of bearing pad	$L_{B\,bearing\,pad}$	m	2.269
Bearing pressure factors	N_q	-	12.03
Bearing pressure factors	N_c	-	22.48
Bearing pressure factors	N_g	-	12.79
Bearing pressure factors	ζ_q	-	1.00
Bearing pressure factors	ζ_{qi}	-	0.43
Bearing pressure factors	ζ_{qt}	-	1.00
Bearing pressure factors	ζ_c	-	1.00
Bearing pressure factors	ζ_{ci}	-	0.37
Bearing pressure factors	ζ_{ct}	-	1.00
Bearing pressure factors	ζ_γ	-	1.00
Bearing pressure factors	$\zeta_{\gamma i}$	-	0.28
Bearing pressure factors	$\zeta_{\gamma t}$	-	1.00
Average bearing strength	$p_{v\,cap}$	kPa	120
Bearing capacity	$P_{v\,cap}$	kN/m	273
Applied vertical force (foundation reaction)	P_v	kN/m	137
Is there sufficient bearing capacity?			OK
Factor against bearing failure			1.99

Average bearing strength at ultimate loads (vertical load only)	q_{ult}	kPa	383
Required bearing strength at ultimate loads (vertical loads only)	$q_{ult\ req}$	kPa	192
Nominated bearing strength at ultimate loads (vertical loads only)	$q^*_{ult\ cap}$	kPa	260
Is there sufficient bearing strength?			OK
Factor againstbearing failure			1.35
Approximate ultimate/working factor			1.30
Required bearing strength at working loads (vertical loads only)	$q_{ult\ req}$	kPa	148
Nominated bearing strength at ultimate loads (vertical loads only)	$q^*_{ult\ cap}$	kPa	200
Is there sufficient bearing strength?			OK
Factor againstbearing failure			1.35

INTERNAL STABILITY

Geogrid Arrangement

Is there a geogrid at the base of the wall (y,n)	-	-	n
Minimum number of geogrids required	N_{min}	-	3
Maximum spacing of geogrids	S_{max}		1067
Minimum spacing of geogrids	S_{min}	mm	200
Grid No	-	-	1
Wall embedment	H_{emb}	mm	200
Total height	H	mm	3200
Trial base geogrid total length	L	mm	2240
Extra geogrid length beyond failure plane			300
Incremental increase in elevation	E"	mm	400
Elevation of geogrid from underside of lowest unit	$E_{(n)}$	mm	400
Distance from top of wall	H - E(n)	mm	2800
Is geogrid present? (1 = yes, 0 = no)			1
Is top geogrid more than 400 mm from the top?			
Is the top geogrid less than 300 mm from the top?			
Is the geogrid spacing greater than 600 mm ?			
Geogrid length	L	mm	2200
Geogrid designation	-	-	a
Geogrid type	-	-	Polyester
Geogrid Tensile Strength			0.000
Height of groundwater above midpoint of contributary area	D_{gw}	m	0.000
Geogrid contributory area	$A_{c(n)}$	m^2/m	0.600
Depth to midpoint of contributory area	D_n	m	2.900
Applied tensile load at each geogrid	$F_{g(n)}$	kN/m	13.7
Design tensile strength of geogrid	T^*_d	kN/m	12.2
Does geogrid have sufficient strength			0.89
Factor against geogrid tensile rupture			0.89

Pullout Resistance

Geogrid length beyond failure plane	L_{an}	mm	1627
Average depth of overburden	d_n	m	2.819
Applied tensile load at each layer	$F_{g(n)}$	kN/m	13.7
Anchorage capacity	$AC_{(n)}$	kN/m	46.2

Does geogrid have sufficient anchorage			OK
Factor against pullout			3.38

Internal Sliding Along Geogrid

Inneffective length of geogrid	ΔL	mm	323
Effective length of geogrid	$L'_{s(n)}$	mm	1617
Length of slope increment	$L''_{s(n)}$	mm	1
Length of soil acting above top of wall	$L_{\beta(n)}$	mm	1618
Height of soil acting above top of wall	$h_{(n)}$	mm	40
Weight of soil below top of wall	$W'_{r(n)}$	kN/m	72.4
Weight of soil above top of wall	$W'_{r\beta(n)}$	kN/m	0.5
Surcharge force acting on geogrid	$Q'_{r\beta(n)}$	kN/m	0.0
Vertical line dead load on geogrid	Q'_{PDv}	kN/m	0.0
Vertical line live load on geogrid	Q'_{PLv}	kN/m	0.0
Horiz active force at geogrid due to surcharge	$P_{q\,H(n)}$	kN/m	6.5
Horiz active force at geogrid due to soil	$P_{s\,H(n)}$	kN/m	30.8
Horizontal force at geogrid due to wind line load	$P_{wH\,H(n)}$	kN/m	0.0
Horizontal force at geogrid due to earthquake line load	$P_{wH\,H(n)}$	kN/m	0.0
Sliding resistance of geogrid	$R'_{s(n)}$	kN/m	50.5
Weight of wall (and kerb) acting at geogrid	$W_{w(1)}$	kN/m	12.9
Interface shear strength (intercept at no vertical load)	a_u	kN/m	9.6
Friction angle for interface shear strength	λ_{cs}	o	34.0
Unit/geogrid interface shear capacity at geogrid	$V_{u(n)}$	kN/m	14.7
Total combined shear/sliding capacity of geogrid & interface			65.1
Total horiz force at geogrid	$P_{a\,H(1)}$	kN/m	37.3
Does unit/geogrid interface + geogrid 1 have enough shear strength			OK
Factor against internal sliding at geogrid			1.74

Bulging

Horizontal active force due to surcharge at unit/geogrid interface	$P_{q\,H}$	kN/m	6.0
Horizontal active force due to soil at unit/geogrid interface	$P_{s\,H}$	kN/m	27.9
Total horizontal active forces at unit/geogrid interface	P_H	kN/m	33.9
Net horizontal active forces at unit/geogrid interface	$P_{H(n)}$	kN/m	4.3
Unit/geogrid interface shear capacity at geogrid	$V_{u(n)}$	kN/m	14.7
Does unit/geogrid interface have enough bulging shear strength			OK
Factor against bulging			3.44

Connection Strength

Weight of wall acting at geogrid	$W_{w(1)}$	kN/m	12.9
Connection strength (intercept at no vertical load)	a_{cs}	kN/m	8.4
Friction angle for connection strength	λ_{cs}	o	12.0
Unit/geogrid interface shear capacity at geogrid 1	$V_{u(n)}$	kN/m	8.4
Total horizontal active forces at unit/geogrid connection	P_H	kN/m	13.3
Does unit/geogrid interface have enough connection strength			0.63

Factor against connection failure		0.63
Is the density of the facing within 25% of drainage fill density	-	OK
Is wall embedment sufficient		OK
Is there sufficient sliding resistance of bearing pad?		2.24
Is there sufficient overturning resistance		5.05
Is there sufficient bearing capacity? (Bearing pad on foundation)		2.21
Is there sufficient bearing strength?		1.50
Is top geogrid more than 400 mm from the top?		
Does geogrid have sufficient strength		0.89
Does geogrid have sufficient anchorage		3.38
Does unit/geogrid interface + geogrid 1 have enough shear strength		1.74
Does unit/geogrid interface have enough bulging shear strength		3.44
Does unit/geogrid interface have enough connection strength		0.63

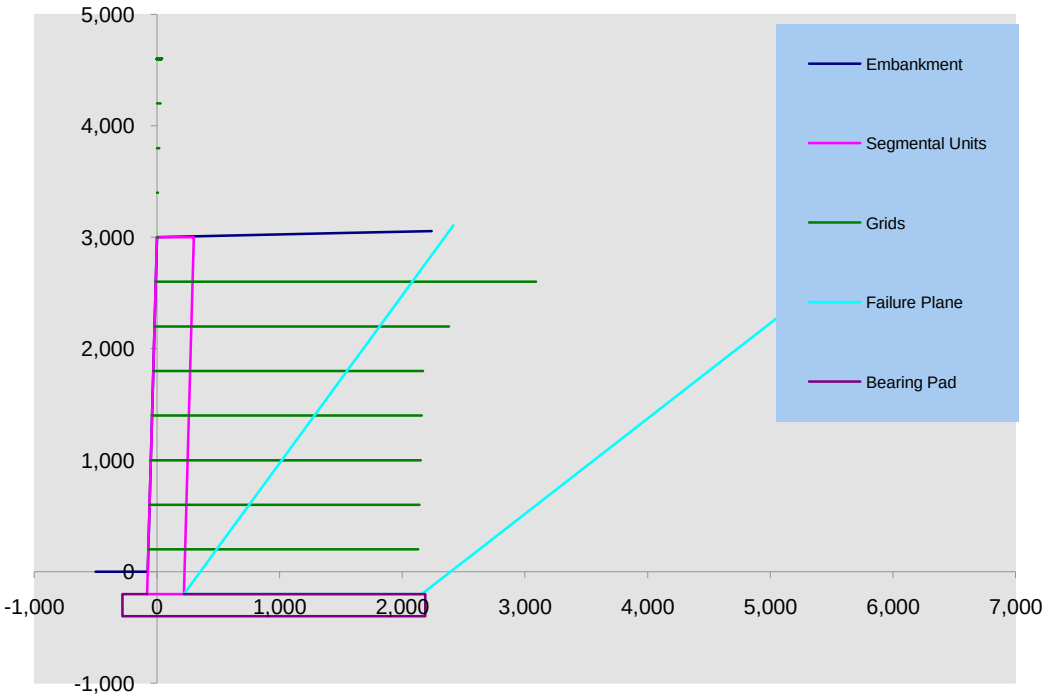

SUMMARY		Maximum Vert Load	Minimum Vert Load
Is the density of the facing within 25% of drainage fill density	OK		
Is wall embedment sufficient	OK		
Is there sufficient sliding resistance of bearing pad?		2.24	1.41
Is there sufficient overturning resistance		5.05	3.30
Is there sufficient bearing capacity? (Bearing pad on foundation)		2.21	1.99
Is there sufficient bearing strength?		1.50	1.35

Is top geogrid more than 400 mm from the top?

Does geogrid have sufficient strength
Does geogrid have sufficient
anchorage
Does unit/geogrid interface + geogrid 1 have enough shear
strength

Does unit/geogrid interface have enough bulging shear strength

Does unit/geogrid interface have enough connection strength

Segmental Gravity Walls

			Tier	Lower
Height of exposed stem	H_1	mm	**3,000**	
Lower & upper tiers		mm		
Live load surcharge		kPa	5.0	
Backfill slope near wall (0.01=level, 9.46=1:6, 14.04=1:4)		°	1.43	
Foundation friction angle		°	30	
Retained soil friction angle		°	30	
Infill friction angle		°	32	
Retained soil cohesion		kPa	**0.0**	
Is embankment tiered? (y/n)			**n**	
Concrete behind facing		mm	**1,200**	
Angle of layback		°	1.43	
Embedment Lower & Upper		mm	0	
Bearing pad width		mm	1,500	
Bearing pad thickness		mm	400	
Bearing pad toe to face of unit		mm	800	
Length of slope behind wall		mm	3,000	
Separation of tiers		mm		
Is soil friction vert component load factor same as horiz? (y/n)		y/n	**y**	
What proportion of potential facing/soil friction resistance is effective?		%	100%	
Consider Rankine Bell?		y/n	n	
Consider water in tension cracks?		y/n	y	
Is base friction (structure-bearing pad) required ?		y/n	y	
Is base adhesion (structure-bearing pad) required ?		y/n	y	
Is passive resistance (structure-bearing pad) required ?		y/n	y	
Is base friction (bearing pad-foundation) required ?		y/n	y	
Is base adhesion (bearing pad-foundation) required ?		y/n	y	
Is passive resistance (bearing pad-foundation) required ?		y/n	y	
Distance from toe of facing to centroid of reaction, x'	443	mm	443	
Working stress distance from toe of facing to centroid of reaction, x"		mm	0	
Is the wall supported at the top?		y/n	n	
External friction angle (to concrete surface)	δ_i	°	Use default	
Foundation soil cohesion	c_f	kPa	**0.0**	

Required working stress factor against oveturning about toe			2.00	

Tiering and Layback

Tier

Maximum permissible exposed height of any wall	$H_{1\,permissible}$	mm	3,600	
Total height of exposed stem(s)	H_1	mm	3,000	
Is the embankment to be tiered? (y/n)			n	
Exposed height of tier	H_1	mm	3000	

Is the height of the tier satisfactory?			OK
Normal angle of layback	Ω_{normal}	^{o}	1.4
Design layback of wall	Ω	^{o}	1.4

Backfill

Effective angle of backfill loads	β'	^{o}	1.4
Is the wall designed for selected infill material (y/n)			n

Separation of tiers

Required horizontal separation/height of top tier			1.50
Minimum horizontal separation of two tiers	$L_{s\ min}$	mm	0
Horizontal separation of two tiers (face to face)	$L_{s\ min}$	mm	0
Actual angle (lower toe to upper top from horizontal)	ω_{effect}	^{o}	89
Required angle (lower toe to upper top from horizontal)	$\omega_{effect\ req}$		70
Is there sufficient separation?			Problem
Actual angle (lower heel to upper toe from horizontal)	ω_{effect}	^{o}	-65
Required angle (lower heel to upper toe from horizontal)	$\omega_{effect\ req}$		45
Is there sufficient separation?			OK

Bearing Pad

Bearing pad (road base/cement stabilised/reinforced concrete (rb/cs/rc)			cs
Bearing pad material			Cement-stabilised rock, lean-mix concrete
Bearing pad thickness	H_{bp}	mm	400
Bearing pad effective width (ie minimum width)	L_{bp}	mm	1500
Actual bearing pad width	$L_{bp\ act}$	mm	**1500**
Bearing pad toe to face of unit	$L_{bp\ t}$	mm	**800**
Slope of bearing pad/foundation interface	a	^{o}	0

Embedment

For compaced soil base, Clear height/Minimum embedment	$H'/H_{emb\ min}$	mm	20
Minimum wall embedment for compacted soil base	$H_{e\ min}$	mm	150
Specified wall embedment	H_e	mm	**0**
Is there sufficient wall embedment for compacted soil base?			No - Use lean-mix concrete

Water Table

Is average water table <u>above</u> footing?			N
Is average water table above bearing pad, but below footing?			N
Is average water table <u>below</u> bearing pad?			Y

Piers

Length of below-ground pier (along wall)	Lf	mm	1000
Length of panel (along wall ie post centres)	Lw	mm	1000

Passive pier factor	k pas	-	1.00
What proportion of potential facing/soil friction resistance is effective?			0%

Segmental Gravity Retaining Wall
Design Calculations

Client:	0	
Project:	0	
Location:	0	

TIER			**Lower**
INFILL SOIL			
Horiz active pressure coefficient	K_{Ai}	-	0.300
Internal angle of friction	ϕ^*_i	^{o}	29.4
External friction angle (to concrete surface)	δ_i	^{o}	19.6
Cohesion	c^*_i	kPa	0.0
Chacteristic soil density	γ^*_I	kN/m^3	**20**
RETAINED SOIL			
Horiz active pressure coefficient	K_{ar}	-	0.337
Internal angle of friction	ϕ^*_r		26.1
External friction angle (to concrete surface)	δ_r	^{o}	26.1
Chacteristic soil density	γ^*_r	kN/m^3	20
Cohesion	c^*_r	kPa	0
Passive pressure coefficient	K_p	-	
DESIGN SOIL			Ultimate
Is the wall designed for selected infill material (y/n)			n
Horiz active pressure coefficient	K_a	-	**0.337**
Internal angle of friction	ϕ^*		26.1
External friction angle (to concrete surface)	δ	^{o}	26.1
Cohesion	c^*_r	kPa	0.0
Chacteristic soil density	γ^*	kN/m^3	20.0
Passive pressure coefficient	K_p	-	2.92
Orientation of failure plane	α_{ii}	^{o}	

FACING DETAILS			**Lower**
Width of concrete fill behind wall		mm	1,200
Angle of layback	ω	**°**	1.4
Brand of block		**-**	CMAA
Designation		**-**	Generic
Proportion cores	p	%	89%
Default angle of layback	Ω	**°**	1.43
Density of infill concrete	γ_{conc}	kg/m^3	2,039
Density of fill within the unit	γ_{fill}	kg/m^3	2,039
Proportion of cores filled	p	%	0%
Mass of concrete behind the unit	M_c	kg	220.2
Mass of one unit	M_u	kg	55.0
Mass of fill within the unit	M_s	kg	0.0
Height of one unit	H_u	mm	200
Length of one unit	L_u	mm	450
Width of one unit (depth into the embankment)	W_u	mm	300

Is the base of the facing smooth or rough? (s/r)			r
Normal maximum height at the normal angle of layback			3600
Total width	W_{uc}	mm	**1500**
Position of centre of gravity of unit + soil	G_u	mm	750
Spacing of units	S_u	mm	0
Effective mass of one unit + infill soil + concrete	M_{su}	kg	275.2
Mass of facing	γ_{su}	kN/m^3	20.00

WALL GEOMETRY

Wall clear height/Minimum wall embedment	$H'/H_{emb\ min}$	-	20
Minimum wall embedment	$H_{emb\ min}$	mm	150
Wall embedment	H_{emb}	mm	0
Is wall embedment sufficient?			Problem
Total height of wall at facing (Exposed + embedment)	H"	mm	3,000
Length of top of wall	L'	mm	1,200
Length increase due to backfill slope	L"	mm	1
Length at top of backfill slope	L_b	mm	1,201
Height from top of wall to top of slope	h	mm	30
Total height at retained soil interface including embedment	H	mm	3,030
Bearing pad minimum thickness	H_d	mm	400
Slope of levelling pad/foundation interface	α	^{o}	0
Slope of levelling pad/foundation interface	α	radians	0.000

EXTERNAL STABILITY Ultimate

Horizontal Loads

Horizontal active force due to surcharge	$P_{q\,H}$	kN/m	6.95
Horizontal active force due to soil	$P_{s\,H}$	kN/m	35.09
Horizontal force due to water in front of wall	$P_{w\ front}$	kN/m	0.00
Horizontal force due to water behind infill	$P_{w\ rear}$	kN/m	0.00
Horizontal force due to dead line load at top	$P_{D\,H}$	kN/m	0.00
Horizontal force due to live line load at top	$P_{L\,H}$	kN/m	0.00
Horizontal force due to wind line load at top	$P_{W\,H}$	kN/m	0.00
Horizontal force due to earthquake line load at top	$P_{E\,H}$	kN/m	0.00
Horizontal active force due to water in tension cracks	$P_{w\,H}$	kN/m	0.00
Total horizontal active force	P_{bH}	kN/m	42.04
Horizontal active force on bearing pad due to surcharge	P_{bpqH}	kN/m	0.91
Horizontal active force on bearing pad due to soil	P_{bpsH}	kN/m	9.76
Horizontal force due to water in front of bearing pad	$P_{w\ front}$	kN/m	0.00
Horizontal force due to water behind bearing pad	$P_{w\ rear}$	kN/m	0.00
Total horizontal force (including bearing pad)	P_{fH}	kN/m	52.70

Vertical Lever Arms (above base/bearing pad interface)

Vertical lever arm of horizontal water in tension cracks	y_{qh}	m	0.000
Vertical lever arm of horizontal surcharge load above toe	y_{qh}	m	1.515
Vertical lever arm of horizontal soil load above toe	y_{qh}	m	1.010
Vertical lever arm of horizontal force due to water in front of wall	y_{wf}	m	0.000
Vertical lever arm of horizontal force due to water behind infill	y_{wb}	m	0.000
Vertical lever arm of dead line loads above toe	y_{Dh}	m	3.000
Vertical lever arm of live line loads above toe	y_{Lh}	m	3.000

Vertical lever arm of wind line loads above toe	y_{Wh}	m	3.000
Vertical lever arm of earthquake line loads above toe	y_{Eh}	m	3.000
Vertical Loads			
Vertical weight of facing	$P_{f\,V}$	kN/m	72.00
Verticl load due to sloping soil	$P_{f\,slope\,V}$	kN/m	0.29
Vertical component of surcharge load	$P_{q\,V}$	kN/m	3.20
Vertical component of soil load	$P_{s\,V}$	kN/m	16.15
Vertical line dead load (on wall stem & no-fines concrete)	P_{Dv}	kN/m	**0.00**
Vertical line live load (on wall stem & no-fines concrete)	P_{Lv}	kN/m	0.00
Vertical uplift of water displaced by structure	$P_{w\,V}$	kN/m	0.00
Total vertical force	P_{bV}	kN/m	91.63
Weight of bearing pad	P_{bpV}	kN/m	9.60
Vertical uplift of water displaced by bearing pad	$P_{bp\,w\,V}$	kN/m	0.00
Vertical component of surcharge load on bearing pad	$P_{q\,V}$	kN/m	0.44
Vertical component of soil load on bearing pad	$P_{s\,V}$	kN/m	4.79
Total vertical force (including bearing pad)	P_{fv}	kN/m	106.47

Horizontal Lever Arms

Horizontal Lever Arms About Toe

Horizontal lever arm for facing (block + no-fines concrete)	x_{fv}	m	0.787
Horizontal lever arm of sloping soil	$x_{f\,slope\,v}$	m	1.175
Horizontal lever arm for vertical surcharge load	x_{qv}	m	1.538
Horizontal lever arm for vertical soil load	x_{sv}	m	1.525
Horiz lever arm to vertical line dead load	x_{DV}	m	0.100
Horiz lever arm of vertical line live load	x_{LV}	m	0.100
Horizontal lever arm from toe for water uplift	$x_{fv\ wu}$	m	0.750

Horizontal Lever Arms About x'

Horizontal lever arm for facing (block + no-fines concrete)	x_{fv}	m	0.344
Horizontal lever arm of sloping soil	$x_{f\,slope\,v}$	m	0.732
Horizontal lever arm for vertical surcharge load	x_{qv}	m	1.095
Horizontal lever arm for vertical soil load	x_{sv}	m	1.082
Horiz lever arm to vertical line dead load	x_{DV}	m	-0.343
Horiz lever arm of vertical line live load	x_{LV}	m	-0.343
Horizontal lever arm from toe for water uplift	$x_{fv\ wu}$	m	0.307
Distance from toe of facing to centroid of reaction	x'	m	0.443

Sliding (Lower structure / bearing pad material)

Is base friction (structure-bearing pad) required ?			y
Is base adhesion (structure-bearing pad) required ?			y
Is passive resistance (structure-bearing pad) required ?			y
Friction resistance of structure on bearing pad	P_{bf}	kN/m	73.0
Base adhesion of structure on bearing pad	P_{ba}	kN/m	0.00
Resisting passive earth pressure on structure	P_{bp}	kN/m	0.00
Vertical lever arm of passive resistance	y_p	m	0.000
Total sliding resistance of facing on bearing pad	R_b	kN/m	73.0
Sliding force of stem on bearing pad	P_{bH}	kN/m	42.0

Is there sufficient sliding resistance?			OK
Factor against sliding			1.74

Sliding (Bearing pad material / Foundation)

Is base friction (bearing pad-foundation) required ?			y
Is base adhesion (bearing pad-foundation) required ?			y
Is passive resistance (bearing pad-foundation) required ?			y
Friction resistance of bearing pad on foundation	P_{ff}	KN/m	52.2
Base adhesion of bearing pad on foundation	P_{fa}	KN/m	0.00
Resisting passive earth pressure on structure	P_{fp}	KN/m	3.30
Vertical lever arm of passive resistance	y_{fp}	m	0.133
Total sliding resistance of facing on bearing pad	R_f	kN/m	55.5
Sliding force of stem on bearing pad	P_{fH}	kN/m	52.7
Is there sufficient sliding resistance?			OK
Factor against sliding			1.05

Overturning About Toe and Base/Bearing Pad Interface

Resistance moment (rectangular bearing distribution)	M_r	kNm/m	86.6
Overturning moment (rectangular bearing distribution)	M_o	kNm/m	46.0
Is there sufficient overturning resistance?			OK
Factor against overturning			1.88

Overturning About x' (i.e. Centroid of reaction) at Base/Bearing Interface

Resistance moment (rectangular bearing distribution)	M_r	kN.m/m	**45.97**
Overturning moment (rectangular bearing distribution)	M_o	kN.m/m	**45.97**
Is there sufficient overturning resistance?			Problem
Factor against overturning			1.00

Bearing (Retaining Structure on Bearing Pad)

Vertical loads / Horizontal loads	P_H/P_v	-	0.459

Bearing (Bearing Pad on Foundation)

Total horizontal force (including bearing pad)	P fH	kN/m	52.7
Total vertical force (including bearing pad)	P fv	kN/m	106.5
Vertical loads / Horizontal loads	P_H/P_v	-	0.495
Eccentricity of reaction from centre of stem	e	m	0.307
Bearing width at underside of stem	B_{facing}	m	1.500
Effective bearing width at underside of facing	$L_{B\ facing}$	m	0.886
Is reaction within stem footprint?			OK
Bearing width at underside of bearing pad	$B_{bearing\ pad}$	m	1.500
Effective bearing width at underside of bearing pad	$L_{B\ bearing\ pad}$	m	1.500
Effective bearing depth	H_{bear}	m	0.400
Bearing pressure factors	N_q	-	**12.03**
Bearing pressure factors	N_c	-	**22.48**
Bearing pressure factors	N_γ	-	**12.79**
Bearing pressure factors	ζ_q	-	1.000
Bearing pressure factors	ζ_{qi}	-	**0.255**

Bearing pressure factors	ζ_{qt}	-	1.000
Bearing pressure factors	ζ_{c}	-	1.000
Bearing pressure factors	ζ_{ci}	-	**0.187**
Bearing pressure factors	ζ_{ct}	-	1.000
Bearing pressure factors	ζ_{γ}	-	1.000
Bearing pressure factors	$\zeta_{\gamma i}$	-	**0.129**
Bearing pressure factors	$\zeta_{\gamma t}$	-	1.000

Bearing Pad

Average bearing pad bearing stress on effective width	p_1	kPa	103.4
Average bearing pad bearing strength	$p_{v\ cap}$	kPa	3,800.0
Does bearing pad have sufficient bearing capacity?			OK
Factor against bearing pad failure			36.8

Foundation

Average foundation bearing stress on effective width under bearing pad	p 2	kPa	61.1
Average foundation bearing strength of foundation under bearing pad	$p_{v\ cap}$	kPa	49.3
Bearing capacity	$P_{v\ cap}$	kN/m	73.9
Applied vertical force (foundation reaction)	P_v	kN/m	106.5
Does foundation have sufficient bearing capacity?			Problem
Factor against foundation failure			**0.69**

Average bearing strength at <u>ultimate</u> loads (vertical load only) under bearing pad	q_{ult}	kPa	277
Required bearing strength at <u>ultimate</u> loads (vertical loads only) under bearing pad	$q_{ult\ req}$	kPa	399
Nominated bearing strength at <u>ultimate</u> loads (vertical loads only) under bearing pad	$q^*_{ult\ cap}$	kPa	260
Is there sufficient bearing strength under bearing pad?			0.65
Factor against bearing failure under bearing pad			0.65

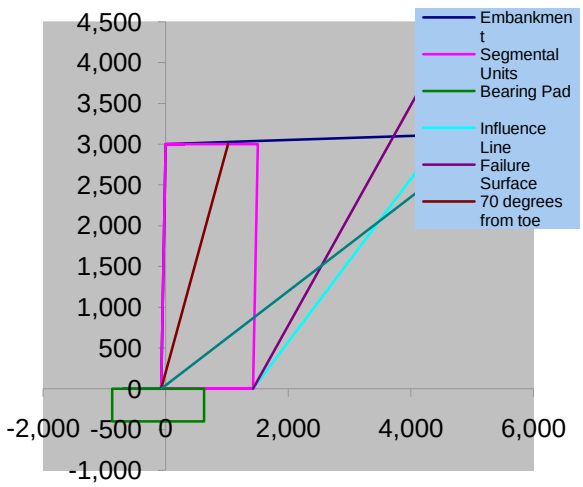

Reinforced Concrete Masonry Cantilever Gravity Retaining Wall

PRINCIPAL INPUTS

Height of exposed stem	H_1	mm	**3,000**
Live load surcharge	q_l	kPa	**5.0**
Backfill slope (0.01=level, 9.46=1:6, 14.04=1:4)	β_1	^{o}	**1.4**
Foundation friction angle	ϕ_f	^{o}	**30**
Retained soil friction angle	ϕ_r	^{o}	**30**
Infill friction angle	ϕ_l	^{o}	**30**
Foundation soil cohesion	c_f	kPa	**0**
Toe to stem	B_5/B_1	%	**0%**
Is soil friction vert load factor same as horiz? (y/n)			**n**
Stem below ground (Concrete hob height)	H_{12}	mm	**100**
Design layback of wall	Ω	^{o}	**1.4**
Bearing pad thickness	H_{bp}	mm	**300**
Specified distance from toe to centroid of reaction	x'	mm	**329**
Specified min toe-stem or heel-stem	x"	mm	100
Is the back face of fill assumed vertical or sloping, same as wall (v/s) ?			s
Does the dead load surcharge extend over the infill soil above a rigid base? (y/n)			n
Thin stem thickness			190
Thin stem effective depth			
Thin stem reinforcement			16
Thin stem spacing of reinforcement			400
Thick stem thickness (If cavity construction, thickness of reinforced leaf)			290
Thick stem effective depth			
Thick stem reinforcement			16
Thick stem spacing of reinforcement			200

BASE DIMENSIONS

Total footing width	B_1	mm	1550
Depth of key beneath base	H_3	mm	300
Toe to stem	B_4	mm	100
Base thickness	H_2	mm	**350**
Is the base thicker than thick stem?			OK
Toe to key	B_2	mm	1250
Key width	B_3	mm	300
Nominated main reinforcement clear cover	c_b	mm	70
Angle of tilt of "base"	α	^{o}	0
Angle of toe to vertical	α_{toe}	^{o}	0
Angle of fill in front of toe	ε	^{o}	0
Specified distance from toe to centroid of reaction	x'	mm	329
Specified min toe-stem or heel-stem	x"	mm	100

BEARING PAD

Bearing pad (road base/cement stabilised/reinforced concrete (rb/cs/rc/nil)			rb
Bearing pad material			Compacted road base
Depth of key beneath base	H_3	mm	300
Bearing pad thickness	H_{bp}	mm	300
Bearing pad effective width (ie minimum width)	L_{bp}	mm	1259

Actual bearing pad width	$L_{bp\ act}$	mm	1259
Toe dimension of bearing pad	$L_{bp\ t}$	mm	400
Depth to underside of bearing pad	H_{emb+bp}	mm	750

WALL AND BASE DATA

Height of exposed stem (Blockwork height)	H_1	mm	3000
Total height of stem and hob	H_6	mm	3100
Design layback of wall	Ω	1 in	40
Backfill slope at wall	β_1	^{o}	1.4
Backfill slope at distance behind wall	β_2	^{o}	1.4
Wall slope	ω	^{o}	1.43
Length of slope at wall	$L_{slope\ 1}$	mm	1,500
Length of slope at distance behind wall	$L_{slope\ 2}$	mm	0

THIN STEM DIMENSIONS

Manufacturer			0
Block description			UU or H
Block code number			2091, 2048
Block width	T_1	mm	190
Block height	$h_{b\ 1}$	mm	190
Block face shell minimum thickness	$t_{s\ 1}$	mm	30
Block face shell taper	$t_{t\ 1}$	mm	3
Height of thin stem	H_7	mm	1800

THICK STEM DIMENSIONS			**Reinforced leaf**
Height of thick stem (excluding hob)	H_{14}	mm	1200
Are 290 wide blocks available for the thick stem? (y/n)			y
Manufacturer			Generic
Block description			UU or H
Block code number			3091, 3048
Block width	$w_{b\ 2}$	mm	290
Block height	$h_{b\ 2}$	mm	190
Block face shell minimum thickness	$t_{s\ 2}$	mm	30
Block face shell taper	$t_{t\ 2}$	mm	3
Required cavity width	C_{min}	mm	0
Cavity width	C	mm	0
Width of thick stem	T_2	mm	290
Min permissible thickness of thick stem	$T_{2\ min}$	mm	290
Is the wall width at the base satisfactory?			OK

			Supplementary leaf (if applicable)
Manufacturer			
Block description			0
Block code number			0
Block width	$w_{b\ 2}$	mm	0
Block height	$h_{b\ 2}$	mm	0
Block face shell minimum thickness	$t_{s\ 2}$	mm	0
Block face shell taper	$t_{t\ 2}$	mm	0

Concrete Hob

Hob thickness	T_3	mm	340
Hob height	H_{13}	mm	100

CONCRETE, BLOCK, GROUT, STEEL AND MORTAR AND PROPERTIES

Concrete strength	f'_c	MPa	25
Concrete block strength	$f'_{uc\ 1}$	MPa	15
Concrete block characteristic shear strength	f'_{vm}	MPa	0
Grout strength	f'_c	MPa	20
Steel yield strength	f_{sy}	MPa	500
Mortar designation			M3
Mortar height	$h_{j\ 1}$	mm	10
Density of reinf masonry	γ^*_{mas}	kN/m^3	22.0
Density of concrete	γ^*_{conc}	kN/m^3	25.0

THIN STEM REINFORCEMENT AND BLOCK PROPERTIES

Steel dia	Dia	mm	**16**
Spacing of bars (200, 400)	Spacing	mm	**400**
Minimum cover from shell/grout interface to face of steel	c	mm	20
Minimum cover from effective outside face to steel centre line	ccl_{min}	mm	61
Nominated cover to steel centre line	ccl	mm	65
Is the cover to steel centre line satisfactory?			OK
Yield strength of steel	f_{sy}	MPa	500
Block strength	f'_{uc}	MPa	15
Characteristic shear strength	f'_{vm}	MPa	0.35
Capacity reduction factor	ϕ	-	0.75
Design width	B	mm	1000
Shear width	B_w	mm	1000

THICK STEM REINFORCEMENT AND BLOCK PROPERTIES

Steel dia	Dia	mm	**16**
Spacing of bars (200, 400)	Spacing	mm	**200**
Minimum cover from shell/grout interface to face of steel	c	mm	20
Minimum cover from effective outside face to steel centre line	ccl_{min}	mm	61
Nominated cover to steel centre line	ccl		65
Is the cover to steel centre line satisfactory?			OK
Yield strength of steel	f_{sy}	MPa	500
Block strength	f'_{uc}	MPa	15
Characteristic shear strength	f'_{vm}	MPa	0.35
Capacity reduction factor	ϕ	-	0.75
Design width	B	mm	1000
Shear width	B_w	mm	1000

BASE REINFORCEMENT AND CONCRETE PROPERTIES

Steel dia	Dia	mm	16
Spacing of bars (200, 400)	Spacing	mm	200
Minimum cover to face of steel	c	mm	50
Minimum cover to steel centre line	ccl_{min}	mm	58
Nominated cover to steel centre line	ccl	mm	70
Is the cover to steel centre line satisfactory?			OK
Steel dia	Dia	mm	16
Spacing of bars (200, 400)	Spacing	mm	200
Yield strength of steel	f_{sy}	MPa	500

Concrete strength	f'_c	MPa	25.0
Cover to reinforcement in top of base	C	mm	50
Capacity reduction factor	f	-	0.80
Design width	B	mm	1000

INFILL SOIL

Active pressure coefficient	K_{ar}	-	0.324

RETAINED SOIL

Active pressure coefficient	K_{ar}	-	0.337

WALL GEOMETRY

Height of exposed stem	H_1	mm	3000
Stem below ground (hob height)	H_{13}	mm	100
Total height of stem	H_1	mm	3100
Total footing width	B_1	mm	1550
Depth of key beneath base	H_3	mm	300
Thickness of thin stem	T_1	mm	190
Min permissible thickness of thick stem	$T_{2\ min}$	mm	290
Nominated thickness of thick stem at base	$T_{2\ nom}$	mm	290
Thickness of thick stem at base	B_6	mm	290
Base thickness	H_2	mm	350
Height of thin stem	H_7	mm	1800
Heel width to key	B_5	mm	0
Heel to thick stem	B_7	mm	1160
Toe to stem	B_4	mm	100
Thin stem to heel	B_6	mm	1260
Toe to key	B_2	mm	1250
Key width	B_3	mm	300
Distance from toe of facing to centroid of reaction	x'	mm	329
Angle of tilt of "base"	α	^{o}	0.0
Angle of toe to vertical	α_{toe}	^{o}	0.0
Angle of fill in front of toe	e	^{o}	0.0

MOMENT AND SHEAR AT BASE OF THIN STEM

Shear force	V*	kN	16.7
Stem shear capacity	V_{cap}	kN	39.4
Is there sufficient stem shear capacity?			OK
Factor against stem shear failure			2.35
Moment	M*	kN.m	11.3
Stem moment capacity	M_{cap}	kNm	20.8
Is there sufficient stem moment capacity?			OK
Factor against stem moment failure			1.84
Approximate required area of area of steel	$A_{s\ req}$	mm^2/m	301
Approximate max steel centres	Y20 @	mm	1029
Approximate max steel centres	Y16 @	mm	664
Block type factor	k_m	-	1.6
Equivalent brickwork strength	f'_{mb}	MPa	6.20
Ratio of block to joint thickness	h_b/h_j	-	19.0

Block height factor	k_h	-	1.30
Characteristic blockwork strength	f'_m	MPa	8.06
Bedded area	A_b	mm^2	60000
Grout design strength	f'_{cg}	MPa	19.5
Wall thickness	D	mm	190
Effective depth	d	mm	125
Area of one bar	As1	mm^2	200
Actual area in design width	$A_{s\ bal}$	mm^2	500
Balanced area in design width	$A_{s\ bal}$	mm^2	759
Design area	A_{sd}	mm^2	500

MOMENT AND SHEAR AT BASE OF THICK STEM

Shear force	V*	kN	44.4
Stem shear capacity	V_{cap}	kN	72.2
Is there sufficient stem shear capacity?			OK
Factor against stem shear failure			1.63
Moment	M*	kN.m	49.6
Stem moment capacity	M_{cap}	kNm	73.6
Is there sufficient stem moment capacity?			OK
Factor against stem moment failure			1.48
Approximate required area of area of steel	$A_{s\ req}$	mm^2/m	735
Approximate max steel centres	Y20 @	mm	400
Approximate max steel centres	Y16 @	mm	272
Block type factor	k_m	-	1.6
Equivalent brickwork strength	f'_{mb}	MPa	6.20
Ratio of block to joint thickness	h_b/h_j	-	19.0
Block height factor	k_h	-	1.30
Characteristic blockwork strength	f'_m	MPa	8.06
Bedded area	A_b	mm^2	60000
Grout design strength	f'_{cg}	MPa	19.5
Wall thickness	D	mm	290
Effective depth	d	mm	225
Area of one bar	As1	mm^2	200
Actual area in design width	$A_{s\ bal}$	mm^2	1000
Balanced area in design width	$A_{s\ bal}$	mm^2	1367
Design area	A_{sd}	mm^2	1000

MOMENT IN BASE

Moment	M*	kN.m	49.6
Base moment capacity	M_{cap}	kNm	104.0
Is there sufficient base moment capacity?			OK
Factoragainst moment failure			2.10
Effective depth	d	mm	272
Area of one bar	As1	mm^2	200
Actual area in design width	$A_{s\ bal}$	mm^2	1000

WALL AND BASE DETAILS

Height of thick stem (including hob)	H_8	mm	1300
Length of fill at top of wall	L'	mm	1260
Length increase due to backfill slope	L"	mm	1

Length at top of backfill slope	L_b	mm	1261
Height of triangular soil above wall	h	mm	31
Height top of backfill to underside of base	H	mm	3481
Height top of backfill to underside of key	$H_{12\ key}$	mm	3781
Height top of backfill to underside of bearing pad	$H_{12\ bp}$	mm	3781
Height top of backfill to underside of key and/or bearing pad	H_{12}	mm	3781
Height of base + key + embedment	H_{11}	mm	750
Top of stem to under base	H_4	mm	3450
Top of stem to under key	$H_{5\ key}$	mm	3750

WALL AND BASE PROPERTIES

Density of reinf masonry	γ^*_{mas}	kN/m^3	22.0
Density of concrete	γ^*_{conc}	kN/m^3	25.0

MOMENTS AND FORCES ON TOTAL STRUCTURE

At underside of base (base/foundation or base/bearing pad)
Lever arm

Vertical lever arm of horiz active soil pressure on soil behind infill	y_{sH}	m	1.160
Vertical lever arm of horiz active surcharge pressure on soil behind infill	y_{qH}	m	1.741
Vertical lever arm of horizontal force due to water in front of wall	y_{wf}	m	0.000
Vertical lever arm of horizontal force due to water behind infill	y_{wb}	m	0.000
Vertical lever arm of horiz force due to dead line load at top	$y_{D\ H}$	m	3.450
Vertical lever arm of horiz force due to live line load at top	$y_{L\ H}$	m	3.450
Vertical lever arm of horiz wind line load	y_{wH}	m	3.450
Vertical lever arm of horiz earthquake line load	y_{eH}	m	3.450
Vertical lever arm of horiz passive pressure on base	y_{pbH}	m	0.150
Horizontal lever arm of weight of thin stem	x_{1V}	m	-0.134
Horizontal lever arm of weight of thick stem	x_{2V}	m	-0.084
Horizontal lever arm of weight of soil above thick stem	x_{3V}	m	0.011
Horizontal lever arm of weight of sloping soil	x_{4V}	m	0.887
Horizontal lever arm of weight of rectangular soil block	x_{5V}	m	0.727
Horizontal lever arm of weight of base	x_{6V}	m	0.446
Horizontal lever arm of weight of key	x_{7V}	m	1.071
Horizontal lever arm of vertical component of soil pressure at heel	x_{8V}	m	1.250
Horizontal lever arm of vert dead surcharge on infill	x_{qDV}	m	0.591
Horizontal lever arm of vertical line dead load (on wall stem)	x_{DV}	m	-0.229
Horizontal lever arm from toe for water uplift	$x_{fv\ wu}$	m	0.446
Horizontal lever arm of weight of soil under base	x_{9V}	m	
Horizontal lever arm of vertical line live load (on wall stem)	x_{LV}	m	-0.229
Horizontal lever arm of live surcharge vertical force on infill	x_{10V}	m	0.591

Loads

Horiz active soil pressure on soil behind infill	P_{sH}	kN/m	46.3
Horiz active surcharge pressure on soil behind infill	P_{qH}	kN/m	8.0
Horizontal force due to water in front of wall	$P_{w\ front}$	kN/m	0.00
Horizontal force due to water behind infill	$P_{w\ rear}$	kN/m	0.00

Horiz force due to dead line load at top	$P_{D\,H}$	kN/m	0.00
Horiz force due to live line load at top	$P_{L\,H}$	kN/m	0.00
Horiz wind line load	P_{wH}	kN/m	0.0
Horiz earthquake line load	P_{eH}	kN/m	0.0
Horiz passive pressure on base	P_{pbH}	kN/m	-4.2
Weight of thin stem	P_{1V}	kN/m	-6.0
Weight of thick stem and hob	P_{2V}	kN/m	-6.6
Weight of soil above thick stem	P_{3V}	kN/m	-2.9
Weight of sloping soil	P_{4V}	kN/m	-0.3
Weight of rectangular soil block	P_{5V}	kN/m	-57.5
Weight of base	P_{6V}	kN/m	-10.9
Weight of key	P_{7V}	kN/m	-1.8
Vertical component of soil pressure at heel	P_{8V}	kN/m	-15.6
Vert dead surcharge on infill	P_{qDV}	kN/m	0.0
Vertical line dead load (on wall stem)	P_{DV}	kN/m	0.0
Vertical uplift of water pressure under base	$P_{w\,V}$	kN/m	0.00
Weight of soil under base	P_{9V}	kN/m	
Vertical line live load (on wall stem)	P_{LV}	kN/m	0.0
Live surcharge vertical force on infill	P_{10V}	kN/m	0.0

Moment

Moment due to horiz active soil pressure on soil behind infill	M_{sH}	kN.m/m	53.8
Moment due to horiz active surcharge pressure on soil behind infill	M_{qH}	kN.m/m	13.9
Moment due to horizontal force due to water in front of wall	M_{wf}	kN.m/m	0.00
Moment due to horizontal force due to water behind infill	M_{wb}	kN.m/m	0.0
Moment due to horiz force due to dead line load at top	$M_{D\,H}$	kN.m/m	0.0
Moment due to horiz force due to live line load at top	$M_{L\,H}$	kN.m/m	0.0
Moment due to horiz wind line load	M_{wH}	kN.m/m	0.0
Moment due to horiz earthquake line load	M_{eH}	kN.m/m	0.0
Moment due to horiz passive pressure on base	M_{pbH}	kN.m/m	-0.6
Moment due to weight of thin stem	M_{1V}	kN.m/m	0.8
Moment due to weight of thick stem	M_{2V}	kN.m/m	0.6
Moment due to weight of soil above thick stem	M_{3V}	kN.m/m	0.0
Moment due to weight of sloping soil	M_{4V}	kN.m/m	-0.3
Moment due to weight of rectangular soil block	M_{5V}	kN.m/m	-41.8
Moment due to weight of base	M_{6V}	kN.m/m	-4.8
Moment due to weight of key	M_{7V}	kN.m/m	-1.9
Moment due to vertical component of soil pressure at heel	M_{8V}	kN.m/m	-19.5
Moment due to vert dead surcharge on infill	M_{qDV}	kN.m/m	0.0
Moment due to vertical line dead load (on wall stem)	M_{DV}	kN.m/m	0.0
Moment due to vertical uplift of water pressure under base	M_{wV}	kN.m/m	0.0
Moment due to weight of soil under base	M_{9V}	kN.m/m	
Moment due to vertical line live load (on wall stem)	M_{LV}	kN.m/m	0.0
Moment due to live surcharge vertical force on infill	M_{10V}	kN.m/m	0.0

At underside of key (or bearing pad) (base/foundation or bearing pad/foundation) (For active, key is considered p

Lever arm

Vertical lever arm of horiz active soil pressure on soil behind infill	y_{sH}	m	1.260
Vertical lever arm of horiz active surcharge pressure on soil behind infill	y_{qH}	m	1.891
Vertical lever arm of horizontal force due to water in front of wall	y_{wf}	m	0.000
Vertical lever arm of horizontal force due to water behind infill	y_{wb}	m	0.000
Vertical lever arm of horiz force due to dead line load at top	$y_{D\ H}$	m	3.750
Vertical lever arm of horiz force due to live line load at top	$y_{L\ H}$	m	3.750
Vertical lever arm of horiz wind line load	y_{wH}	m	3.750
Vertical lever arm of horiz earthquake line load	y_{eH}	m	3.750
Vertical lever arm of horiz passive pressure on base	y_{pbH}	m	0.250
Horizontal lever arm of weight of thin stem	x_{1V}	m	-0.134
Horizontal lever arm of weight of thick stem	x_{2V}	m	-0.084
Horizontal lever arm of weight of soil above thick stem	x_{3V}	m	0.011
Horizontal lever arm of weight of sloping soil	x_{4V}	m	0.887
Horizontal lever arm of weight of rectangular soil block	x_{5V}	m	0.727
Horizontal lever arm of weight of base	x_{6V}	m	0.446
Horizontal lever arm of weight of key	x_{7V}	m	1.071
Horizontal lever arm of vertical component of soil pressure at heel	x_{8V}	m	1.250
Horizontal lever arm of vert dead surcharge on infill	x_{qDV}	m	0.591
Horizontal lever arm of vertical line dead load (on wall stem)	x_{DV}	m	-0.229
Horizontal lever arm from toe for water uplift	$x_{fv\ wu}$	m	0.446
Horizontal lever arm of weight of soil under base	x_{9V}	m	0.446
Horizontal lever arm of vertical line live load (on wall stem)	x_{LV}	m	-0.229
Horizontal lever arm of live surcharge vertical force on infill	x_{10V}	m	0.591

Loads

Horiz active soil pressure on soil behind infill	P_{sH}	kN/m	54.6
Horiz active surcharge pressure on soil behind infill	P_{qH}	kN/m	8.7
Horizontal force due to water in front of wall	$P_{w\ front}$	kN/m	0.0
Horizontal force due to water behind infill	$P_{w\ rear}$	kN/m	0.0
Horiz force due to dead line load at top	$P_{D\ H}$	kN/m	0.00
Horiz force due to live line load at top	$P_{L\ H}$	kN/m	0.00
Horiz wind line load	P_{wH}	kN/m	0.0
Horiz earthquake line load	P_{eH}	kN/m	0.0
Horiz passive pressure on base	P_{pbH}	kN/m	-11.59
Weight of thin stem	P_{1V}	kN/m	-6.01
Weight of thick stem and hob	P_{2V}	kN/m	-6.63
Weight of soil above thick stem	P_{3V}	kN/m	-2.88
Weight of sloping soil	P_{4V}	kN/m	-0.32
Weight of rectangular soil block	P_{5V}	kN/m	-57.54
Weight of base	P_{6V}	kN/m	-10.85
Weight of key	P_{7V}	kN/m	-1.80
Vertical component of soil pressure at heel	P_{8V}	kN/m	-18.22
Vert dead surcharge on infill	P_{qDV}	kN/m	0.00
Vertical line dead load (on wall stem)	P_{DV}	kN/m	0.00

Vertical uplift of water pressure under base	$P_{w\,V}$	kN/m	0.00
Weight of soil under base	P_{9V}	kN/m	-4.60
Vertical line live load (on wall stem)	P_{LV}	kN/m	0.0
Live surcharge vertical force on infill	P_{10V}	kN/m	0.0

Moment

Moment due to horiz active soil pressure on soil behind infill	M_{sH}	kN.m/m	68.9
Moment due to horiz active surcharge pressure on soil behind infill	M_{qH}	kN.m/m	16.4
Moment due to horizontal force due to water in front of wall	M_{wf}	kN.m/m	0.00
Moment due to horizontal force due to water behind infill	M_{wb}	kN.m/m	0.0
Moment due to horiz force due to dead line load at top	$M_{D\,H}$	kN.m/m	0.0
Moment due to horiz force due to live line load at top	$M_{L\,H}$	kN.m/m	0.0
Moment due to horiz wind line load	M_{wH}	kN.m/m	0.0
Moment due to horiz earthquake line load	M_{eH}	kN.m/m	0.0
Moment due to horiz passive pressure on base	M_{pbH}	kN.m/m	-2.9
Moment due to weight of thin stem	M_{1V}	kN.m/m	0.8
Moment due to weight of thick stem	M_{2V}	kN.m/m	0.6
Moment due to weight of soil above thick stem	M_{3V}	kN.m/m	0.0
Moment due to weight of sloping soil	M_{4V}	kN.m/m	-0.3
Moment due to weight of rectangular soil block	M_{5V}	kN.m/m	-41.8
Moment due to weight of base	M_{6V}	kN.m/m	-4.8
Moment due to weight of key	M_{7V}	kN.m/m	-1.9
Moment due to vertical component of soil pressure at heel	M_{8V}	kN.m/m	-22.8
Moment due to vert dead surcharge on infill	M_{qDV}	kN.m/m	0.0
Moment due to vertical line dead load (on wall stem)	M_{DV}	kN.m/m	0.0
Moment due to vertical uplift of water pressure under base	M_{wV}	kN.m/m	0.0
Moment due to weight of soil under base	M_{9V}	kN.m/m	0.0
Moment due to vertical line live load (on wall stem)	M_{LV}	kN.m/m	0.0
Moment due to live surcharge vertical force on infill	M_{10V}	kN.m/m	0.0

BASE SLIDING
At underside of base (base/foundation or base/bearing pad)

			No live load on retained soil
Friction resistance	P_{fr}	KN	-81.01
Base adhesion	P_{ba}	KN	0.00
Resisting passive earth pressures	P_{pH}	KN	-4.17
Sliding resistance on foundation soil	P_{SR}	kN/m	**-85.2**
Sliding force on foundation soil	P_H	kN/m	**54.3**
Is there sufficient sliding resistance?			OK
Factor against sliding			Not applicable, check below key

At underside of base (base/foundation or base/bearing pad)

			Live load on retained soil
Friction resistance	P_{fr}	KN	-126.6
Base adhesion	P_{ba}	KN	0.0

Resisting passive earth pressures	P_{pH}	KN	-4.2
Sliding resistance on foundation soil	P_{SR}	kN/m	-130.7
Sliding force on foundation soil	P_H	kN/m	54.3
Is there sufficient sliding resistance?			OK
Factor against sliding			Not applicable, check below key

At underside of key (or bearing pad) (base/foundation or bearing pad/foundation) (For active, key is considered p

			No live load on retained soil
Friction resistance	P_{fr}	KN	-53.4
Base adhesion	P_{ba}	KN	0.0
Resisting passive earth pressures	P_{pH}	KN	-11.6
Sliding resistance on foundation soil	P_{SR}	kN/m	**-65.0**
Sliding force on foundation soil	P_H	kN/m	**63.3**
Is there sufficient sliding resistance?			OK
Factor against sliding			1.03

At underside of key (or bearing pad) (base/foundation or bearing pad/foundation) (For active, key is considered p

			Live load on retained soil
Friction resistance	P_{fr}	KN	-83.5
Base adhesion	P_{ba}	KN	0.0
Resisting passive earth pressures	P_{pH}	KN	-11.6
Sliding resistance on foundation soil	P_{SR}	kN/m	-95.0
Sliding force on foundation soil	P_H	kN/m	63.3
Is there sufficient sliding resistance?			OK
Factor against sliding			1.50

OVERTURNING ABOUT SPECIFIED DISTANCE (x') FROM TOE TO CENTROID OF REACTION

			No live load on retained soil
Total resisting moment	M_r	kNm/m	67.7
Overturning moment	M_o	kNm/m	67.7
Is there sufficient overturning resistance?			OK
Factor against overturning			1.00

			Live load on retained soil
Total resisting moment	M_r	kNm/m	67.7
Overturning moment	M_o	kNm/m	67.7
Is there sufficient overturning resistance?			OK
Factor against overturning			1.00

			No live load on retained soil
Total resisting moment	M_r	kNm/m	73.2
Overturning moment	M_o	kNm/m	85.3
Is there sufficient overturning resistance?			Problem
Factor against overturning			0.86

Live load on

			retained soil
Total resisting moment	M_r	kNm/m	73.2
Overturning moment	M_o	kNm/m	85.3
Is there sufficient overturning resistance?			Problem
Factor against overturning			0.86

BEARING
Calculated at underside of base or underside of bearing pad (if required)

			No live load on retained soil Min Vert Load
Normal (vertical) load without bearing	P_v	kN	101.6
Tangential (horizontal) load without passive or friction	P_h	kM	54.3
Horizontal loads / vertical loads	P_h/P_v	-	0.534
Eccentricity	e	m	0.446
Effective bearing width (Meyerhoff)	L_B	m	0.659
Is reaction within the footprint of the stem?			OK
Effective bearing width at underside of bearing pad	$L_{B\ bearing\ pad}$	m	1.259
Effective bearing depth	H_{bear}	m	0.750
Bearing pressure factors	N_q	-	52.73
Bearing pressure factors	N_c	-	64.89
Bearing pressure factors	N_γ	-	85.66
Bearing pressure factors	ζ_q	-	1.00
Bearing pressure factors	ζ_{qi}	-	0.217
Bearing pressure factors	ζ_{qt}	-	1.00
Bearing pressure factors	ζ_c	-	1.00
Bearing pressure factors	ζ_{ci}	-	0.202
Bearing pressure factors	ζ_{ct}	-	1.00
Bearing pressure factors	ζ_γ	-	1.00
Bearing pressure factors	$\zeta_{\gamma i}$	-	0.101
Bearing pressure factors	$\zeta_{\gamma t}$	-	1.00
Average bearing strength	$p_{v\ cap}$	kPa	306
Bearing capacity	$P_{v\ cap}$	kN/m	384
Applied vertical force (foundation reaction)	P_v	kN/m	101.6
Is there sufficient bearing capacity?			OK
Factor against bearing failure			3.78

BEARING
Calculated at underside of base or underside of bearing pad (if required)

			Live load on retained soil Max Vert Load
Normal (vertical) load without bearing	P_v	kN	158.8
Tangential (horizontal) load without passive or friction	P_h	kM	54.3
Horizontal loads / vertical loads	P_h/P_v	-	0.342
Eccentricity	e	m	0.446
Effective bearing width (Meyerhoff)	L_B	m	0.659
Is reaction within the footprint of the stem?			OK
Effective bearing width at underside of bearing pad	$L_{B\ bearing\ pad}$	m	1.259
Effective bearing depth	H_{bear}	m	0.750

Bearing pressure factors	N_q	-	960.32
Bearing pressure factors	N_c	-	64.89
Bearing pressure factors	N_γ	-	1532.62
Bearing pressure factors	ζ_q	-	1.00
Bearing pressure factors	ζ_{qi}	-	0.43
Bearing pressure factors	ζ_{qt}	-	1.00
Bearing pressure factors	ζ_c	-	1.00
Bearing pressure factors	ζ_{ci}	-	0.42
Bearing pressure factors	ζ_{ct}	-	1.00
Bearing pressure factors	ζ_γ	-	1.00
Bearing pressure factors	$\zeta_{\gamma i}$	-	0.28
Bearing pressure factors	$\zeta_{\gamma t}$	-	1.00
Average bearing strength	$p_{v\ cap}$	kPa	13004
Bearing capacity	$P_{v\ cap}$	kN/m	16386
Applied vertical force (foundation reaction)	P_v	kN/m	158.8
Is there sufficient bearing capacity?			OK
Factor against bearing failure			103.07

BEARING
Calculated at underside of key or underside of bearing pad (if thicker than key)

			No live load on retained soil Min Vert Load
Normal (vertical) load without bearing	P_v	kN	101.6
Tangential (horizontal) load without passive or friction	P_h	kM	54.3
Horizontal loads / vertical loads	P_h/P_v	-	0.534
Eccentricity	e	m	0.446
Effective bearing width (Meyerhoff)	L_B	m	0.367
Is reaction within the footprint of the stem?			OK
Effective bearing width at underside of bearing pad	m		0.367
Effective bearing depth	H_{bear}	m	0.750
Bearing pressure factors	N_q	-	12.03
Bearing pressure factors	N_c	-	22.48
Bearing pressure factors	N_γ	-	12.79
Bearing pressure factors	ζ_q	-	1.000
Bearing pressure factors	ζ_{qi}	-	0.217
Bearing pressure factors	ζ_{qt}	-	1.000
Bearing pressure factors	ζ_c	-	1.000
Bearing pressure factors	ζ_{ci}	-	0.146
Bearing pressure factors	ζ_{ct}	-	1.000
Bearing pressure factors	ζ_γ	-	1.000
Bearing pressure factors	$\zeta_{\gamma i}$	-	0.101
Bearing pressure factors	$\zeta_{\gamma t}$	-	1.000
Average bearing strength	$p_{v\ cap}$	kPa	59
Bearing capacity	$P_{v\ cap}$	kN/m	21.7
Applied vertical force (foundation reaction)	P_v	kN/m	-108.8
Is there sufficient bearing capacity?			OK
Factor against bearing failure			-0.20

BEARING
Calculated at underside of key or underside of bearing pad (if thicker than key)

			Live load on retained soil Max Vert Load
Normal (vertical) load without bearing	P_v	kN	158.8
Tangential (horizontal) load without passive or friction	P_h	kM	54.3
Horizontal loads / vertical loads	P_h/P_v	-	0.342
Eccentricity	e	m	0.446
Effective bearing width (Meyerhoff)	L_B	m	0.367
Is reaction within the footprint of the stem?			OK
Effective bearing width at underside of bearing pad	m		0.367
Effective bearing depth	H_{bear}	m	0.750
Bearing pressure factors	N_q	-	12.03
Bearing pressure factors	N_c	-	22.48
Bearing pressure factors	N_γ	-	12.79
Bearing pressure factors	ζ_q	-	1.00
Bearing pressure factors	ζ_{qi}	-	0.43
Bearing pressure factors	ζ_{qt}	-	1.00
Bearing pressure factors	ζ_c	-	1.00
Bearing pressure factors	ζ_{ci}	-	0.38
Bearing pressure factors	ζ_{ct}	-	1.00
Bearing pressure factors	ζ_γ	-	1.00
Bearing pressure factors	$\zeta_{\gamma i}$	-	0.28
Bearing pressure factors	$\zeta_{\gamma t}$	-	1.00
Average bearing strength	$p_{v\ cap}$	kPa	135
Bearing capacity	$P_{v\ cap}$	kN/m	49
Applied vertical force (foundation reaction)	P_v	kN/m	170.1
Is there sufficient bearing capacity?			Problem
Factor against bearing failure			0.29

SUMMARY - EXTERNAL DESIGN
At underside of base (base/foundation or base/bearing pad)

		No live load on infill
Is there sufficient sliding resistance?	OK	Not applicable, check below key
Is there sufficient overturning resistance?	OK	1.00
Is there sufficient bearing capacity?	OK	3.78

At underside of base (base/foundation or base/bearing pad)

		Live load on in
Is there sufficient sliding resistance?	OK	Not applicable, check below key
Is there sufficient overturning resistance?	OK	1.00
Is there sufficient bearing capacity?	OK	103.07

At underside of key (or bearing pad) (base/foundation or bearing pad/foundation) (For active, key is considered p

		No live load on in
Is there sufficient sliding resistance?	**OK**	**1.03**
Is there sufficient overturning resistance?	**Problem**	**0.86**

Is there sufficient bearing capacity?	**OK**	**-0.20**

At underside of key (or bearing pad) (base/foundation or bearing pad/foundation) (For active, key is considered p

		Live load on ir
Is there sufficient sliding resistance?	OK	1.50
Is there sufficient overturning resistance?	Problem	**0.86**
Is there sufficient bearing capacity?	Problem	**0.29**

SUMMARY - INTERNAL DESIGN

		Thick stem
Is there sufficient stem shear capacity?	**OK**	**1.63**
Is there sufficient stem moment capacity?	**OK**	**1.48**
Is there sufficient base moment capacity?	**OK**	**2.10**
		Thin stem
Is there sufficient stem shear capacity?	OK	2.35
Is there sufficient stem moment capacity?	OK	1.84
Is there sufficient anchorage horizontally in base reo?	OK	
Is there sufficient anchorage vertically in starters?	OK	

DEVELOPMENT LENGTH FOR DEFORMED BARS IN TENSION

Straight Deformed Bars

Deformed bar diameter	d_b	mm	16
Concrete compressive strength	f'_c	MPa	25
Steel yield strength	f_{sy}	MPa	500
Cover to straight deformed bar	a	mm	62
Is bar horizontal with more than 300 mm concrete under (y/n)			n
Are bars in slabs or walls at centres > 150 mm (y/n)			y
Are bars longitudinal in beams or columns with fitments (y/n)			n
Cross sectional area	A_b	mm^2	200
	k_1	-	1.00
	k_2	-	1.7
Development length (straight bars)	$L_{sy.t}$	mm	243
Min development length (straight bars)	$L_{sy.t}$	mm	400
Design development length (straight bars)	$L_{sy.t}$	mm	400
Rounded (50) design development length (straight bars)	$L_{sy.t}$	mm	**400**
	$L_{sy.t}$ / d_b	mm	25
Is there development length > 12 d_b ?			OK
Design tensile stress (if less than yield)	s_{st}	MPa	337
Development length (straight bars - If less than yield)	$L_{sy.t}$	mm	270
Min development length (straight bars - If less than yield)	$L_{sy.t}$	mm	192
Design development length (straight bars - If less than yield)	$L_{sy.t}$	mm	**270**
Rounded (50) design development length (straight bars - If less than yield)	$L_{sy.t}$	mm	**300**

Standard Hooks

Hook development length (to outside of hook)	$L_{sy.t\ Hook}$		**135**

Angle of hook (180 or 135)		^{o}	180
Diameter of pin / bar diameter		-	5
Diameter of pin		mm	80
External diameter of reinforcement		mm	112
Length around bend		mm	176
Straight extension		mm	70
Straight part of development length		mm	79
Total length		mm	325

Standard Cogs

Cog development length (to outside of cog)	$L_{st\ cog}$	mm	**135**
Cog tail length (to outside of cog)		mm	**220**
Angle of cog		^{o}	90
Diameter of pin / bar diameter		-	5
Diameter of pin		mm	80
External diameter of reinforcement		mm	112
Length around bend		mm	88
Straight extension (cog tail without bend)		mm	158
Straight part of development length		mm	79
Total length (before rounding up)		mm	325

Required cover to cog	a_{cog}	mm	62
Required cover to tip of cog	$a_{cog\ tip}$	mm	62
Req toe + thick stem ($B_5 + T_2$) for anchorage ($L_{st\ cog} + a_{cog}$)	D_{cog}	mm	**197**
Req base thickness (H_2) for anchorage ($L_{st\ cog} + a_{cog\ tip}$)	$D_{cog\ tip}$	mm	**220**
Is there sufficient anchorage horizontally in base reo?			OK
Is there sufficient anchorage vertically in starters?			OK

MOMENTS CALCULATED FOR ROTATION ABOUT THE TOE

At underside of base (base/foundation or base/bearing pad - Horizontal distance from TOE)
Lever arm

Vertical lever arm of horiz active soil pressure on soil behind infill	y_{sH}	m	1.160
Vertical lever arm of horiz active surcharge pressure on soil behind infill	y_{qH}	m	1.741
Vertical lever arm of horizontal force due to water in front of wall	y_{wf}	m	0.000
Vertical lever arm of horizontal force due to water behind infill	y_{wb}	m	0.000
Vertical lever arm of horiz force due to dead line load at top	$y_{D\ H}$	m	3.450
Vertical lever arm of horiz force due to live line load at top	$y_{L\ H}$	m	3.450
Vertical lever arm of horiz wind line load	y_{wH}	m	3.450
Vertical lever arm of horiz earthquake line load	y_{eH}	m	3.450
Vertical lever arm of horiz passive pressure on base	y_{pbH}	m	0.150
Horizontal lever arm of weight of thin stem	x_{1V}	m	0.195
Horizontal lever arm of weight of thick stem	x_{2V}	m	0.245
Horizontal lever arm of weight of soil above thick stem	x_{3V}	m	0.340
Horizontal lever arm of weight of sloping soil	x_{4V}	m	1.216
Horizontal lever arm of weight of rectangular soil block	x_{5V}	m	1.056
Horizontal lever arm of weight of base	x_{6V}	m	0.775
Horizontal lever arm of weight of key	x_{7V}	m	1.400

Horizontal lever arm of vertical component of soil pressure at heel	x_{8V}	m	1.579
Horizontal lever arm of vert dead surcharge on infill	x_{qDV}	m	0.540
Horizontal lever arm of vertical line dead load (on wall stem)	x_{DV}	m	0.100
Horizontal lever arm from toe for water uplift	$x_{fv\ wu}$	m	0.775
Horizontal lever arm of weight of soil under base	x_{9V}	m	
Horizontal lever arm of vertical line live load (on wall stem)	x_{LV}	m	0.100
Horizontal lever arm of live surcharge vertical force on infill	x_{10V}	m	0.920
Loads			
Horiz active soil pressure on soil behind infill	P_{sH}	kN/m	46.32
Horiz active surcharge pressure on soil behind infill	P_{qH}	kN/m	7.98
Horizontal force due to water in front of wall	$P_{w\ front}$	kN/m	0.00
Horizontal force due to water behind infill	$P_{w\ rear}$	kN/m	0.00
Horiz force due to dead line load at top	$P_{D\ H}$	kN/m	0.00
Horiz force due to live line load at top	$P_{L\ H}$	kN/m	0.00
Horiz wind line load	P_{wH}	kN/m	0.00
Horiz earthquake line load	P_{eH}	kN/m	0.00
Horiz passive pressure on base	P_{pbH}	kN/m	-4.17
Weight of thin stem	P_{1V}	kN/m	-6.01
Weight of thick stem and hob	P_{2V}	kN/m	-6.63
Weight of soil above thick stem	P_{3V}	kN/m	-2.88
Weight of sloping soil	P_{4V}	kN/m	-0.32
Weight of rectangular soil block	P_{5V}	kN/m	-57.54
Weight of base	P_{6V}	kN/m	-10.85
Weight of key	P_{7V}	kN/m	-1.80
Vertical component of soil pressure at heel	P_{8V}	kN/m	-15.60
Vert dead surcharge on infill	P_{qDV}	kN/m	0.00
Vertical line dead load (on wall stem)	P_{DV}	kN/m	0.00
Vertical uplift of water pressure under base	$P_{w\ V}$	kN/m	0.00
Weight of soil under base	P_{9V}	kN/m	0.00
Vertical line live load (on wall stem)	P_{LV}	kN/m	0.00
Live surcharge vertical force on infill	P_{10V}	kN/m	0.00
Moment			
Moment due to horiz active soil pressure on soil behind infill	M_{sH}	kN.m/m	53.8
Moment due to horiz active surcharge pressure on soil behind infill	M_{qH}	kN.m/m	13.9
Moment due to horizontal force due to water in front of wall	M_{wf}	kN.m/m	0.00
Moment due to horizontal force due to water behind infill	M_{wb}	kN.m/m	0.0
Moment due to horiz force due to dead line load at top	$M_{D\ H}$	kN.m/m	0.0
Moment due to horiz force due to live line load at top	$M_{L\ H}$	kN.m/m	0.0
Moment due to horiz wind line load	M_{wH}	kN.m/m	0.0
Moment due to horiz earthquake line load	M_{eH}	kN.m/m	0.0
Moment due to horiz passive pressure on base	M_{pbH}	kN.m/m	-0.6
Moment due to weight of thin stem	M_{1V}	kN.m/m	-1.2
Moment due to weight of thick stem	M_{2V}	kN.m/m	-1.6
Moment due to weight of soil above thick stem	M_{3V}	kN.m/m	-1.0

Moment due to weight of sloping soil	M_{4V}	kN.m/m	-0.4
Moment due to weight of rectangular soil block	M_{5V}	kN.m/m	-60.8
Moment due to weight of base	M_{6V}	kN.m/m	-8.4
Moment due to weight of key	M_{7V}	kN.m/m	-2.5
Moment due to vertical component of soil pressure at heel	M_{8V}	kN.m/m	-24.6
Moment due to vert dead surcharge on infill	M_{qDV}	kN.m/m	0.0
Moment due to vertical line dead load (on wall stem)	M_{DV}	kN.m/m	0.0
Moment due to vertical uplift of water pressure under base	M_{wV}	kN.m/m	0.0
Moment due to weight of soil under base	M_{9V}	kN.m/m	
Moment due to vertical line live load (on wall stem)	M_{LV}	kN.m/m	0.0
Moment due to live surcharge vertical force on infill	M_{10V}	kN.m/m	0.0

OVERTURNING ABOUT TOE

			No live load on retained soil
Total resisting moment	M_r	kNm/m	100.5
Overturning moment	M_o	kNm/m	67.0
Normal (vertical) load without bearing	P_v	kN	101.6
Eccentricity	e	m	0.446
Distance from toe to centroid of reaction	x'	mm	329
Distance from toe to centroid of reaction / Base width	x' / B_1		21.2%

			Live load on retained soil
Total resisting moment	M_r	kNm/m	100.5
Overturning moment	M_o	kNm/m	67.0
Normal (vertical) load without bearing	P_v	kN	101.6
Eccentricity	e	m	0.446
Distance from toe to centroid of reaction	x'	mm	329
Distance from toe to centroid of reaction / Base width	x' / B_1		21%